VENTS-US

PRODUCT SPECIFICATIONS

VK 200 EC

INLINE CENTRIFUGAL FAN



MOTOR

High-efficient electronically commutated direct current motors with backward curved blades. Such motors are the most state-of-the-art energy saving solution. Power consumption of EC motors is 35 % less as compared to standard motors. The fans with EC motors have excellent aerodynamic performance and low-noise operation.
EC motors are featured with high performance and total speed controllable range.
High efficiency reaching 90 % is the premium advantage of the electronically-commutated motors. The motors are equipped with ball bearings designed for at least 40 000 operating hours.

DESIGN

Durable, impact-resistant and corrosion-free ABS-plastic casing.
Aerodynamically shaped casing.
Airtight terminal box for connection to power mains.

SPEED CONTROL

The fan is operated with an 0-10 V control signal (ordered separately). The air capacity is controlled depending on air temperature, pressure level, smoke content, etc.
The speed of the EC motor changes proportionally to fluctuations of the control parameter and the fan delivers a required air volume to the ventilation system. Maximum fan speed does not depend on the current frequency.
The fans may be integrated into a unified data processing control system. The specially designed software provides precise control of all the fans integrated into the system.

MOUNTING

The fans are designed for duct mounting in any point of the ventilation system with the casing mounted at any angle. In case of vertical mounting a protective outer hood must be installed on the top.
Fixation to the floor, wall or ceiling is performed with the supplied mounting brackets.
Electric connection and installation must be performed in compliance with the manual and the wiring diagram on the terminal box.

USE

Supply and exhaust ventilation and air conditioning systems of various premises requiring cost-saving controllable ventilation.
The best ventilation solution for exhaust ventilation of bathrooms, kitchens and other humid premises.
Compatible with Ø 8" round air ducts.

DIMENSIONS

Model	Duct dia	Measurements [in.]							Weight [lb]
		Ø D	Ø D1	B	L	L1	L2	L3	
VK 200 EC	8"	7 7/8"	13 3/8"	13 15/16"	10 7/8"	1 3/16"	1 3/16"	1 9/16"	8.8

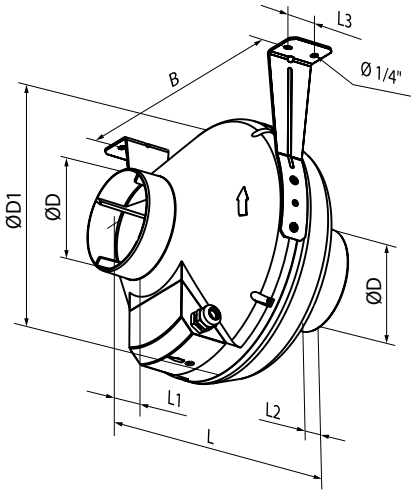

Tel: 888-640-0925
513-583-5786
Sales@vents-us.com
Vents-US.com
400 Murray Rd,
Cincinnati, OH 45217

Intertek

HARDI

2025-02

VENTS-US

PRODUCT SPECIFICATIONS

VK 200 EC

INLINE CENTRIFUGAL FAN

PERFORMANCE

Model	Duct dia	Energy Star compliance	RPM*	Sones	Watts*	Amps*	CFM vs. Static Pressure (Ps) in WG 10 V signal											Max Ps. in WG	Volts
							0"	0.125"	0.2"	0.25"	0.375"	0.5"	0.75"	1"	1.25"	1.5"	2.5"		
VK 200 EC	8"	yes	3000	3.9	99	1.45	471	447	423	418	392	366	312	248	191	142	-	2.24	120

* The parameters RPM, Watts are indicated at 0.2 in WG static pressure.

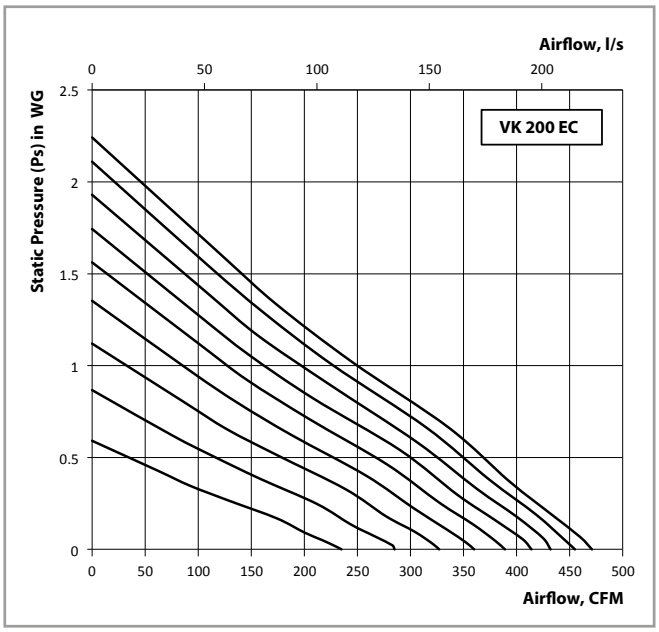

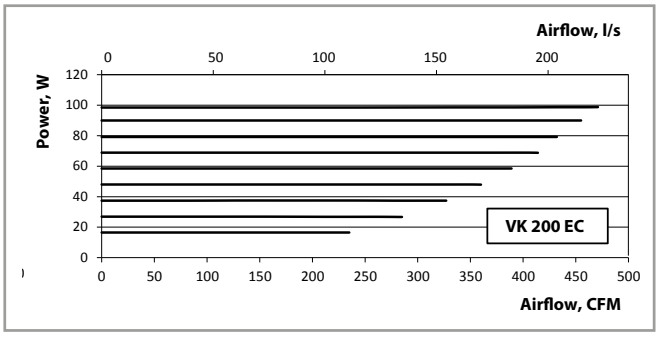

MODEL	QUANTITY	COMMENTS	PROJECT
			location:
			architect:
			engineer:
			contractor:
			submitted by:

Tel: 888-640-0925
513-583-5786

Sales@vents-us.com
Vents-US.com
400 Murray Rd,
Cincinnati, OH 45217

Intertek

HARDI

2025-02