DMZ1 36"x30"

LOCKING METAL ACCESS DOORS



APPLICATIONS

Optimal size model designed for installation and maintenance of Frigate ERV 100 R unit, which are mounted in the gap between the suspended ceiling with drywall and reinforced concrete. Suitable for high-humidity areas. Protected by national patents world-wide.

DESIGN

Made of high-quality steel with a durable powder coating. The use of zinc phosphate compound ensures 100% coating integrity and provides a reliable corrosion protection. Left or right-side opening. Equipped with a easy-to-open key lock – for screwdriver or coin.

MOUNTING

Easy mounting using caulk or glue. Universal mountings for left or right-side opening. Easy servicing.

FEATURES

DMZ1 36"x30" is the special model of VENTS-US' access doors with screw lock. The access panels can be surface or flash mounted. Universal for all surfaces, easy and clean installation by applying glue or caulk to the back of the frame and pressing it into place.



Key lock



DIMENSIONS

Model	Measurements [in.]						
	B	H	B1	H1	B2	H2	L
DMZ1 36"x30"	38 1/8"	32 1/8"	35 3/4"	29 3/4"	35 7/8"	29 7/8"	1 1/2"

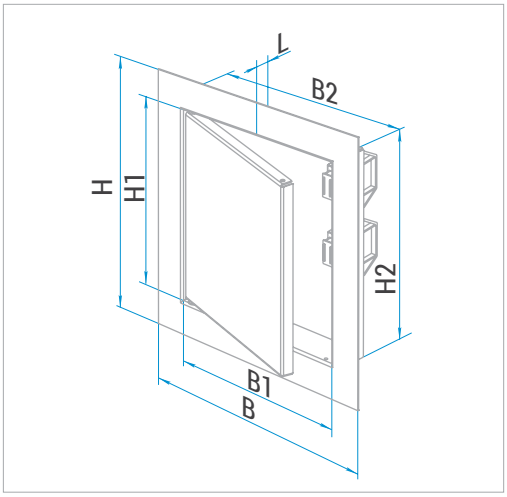

MODEL	QUANTITY	COMMENTS	PROJECT
			location:
			architect:
			engineer:
			contractor:
			submitted by:

400 Murray Road, Cincinnati, OH 45217
Tel: 1-888-640-0925,
Fax: 513-583-5786

E-mail: Sales@Vents-us.com
support@vents-us.com
zoltan@vents-us.com
Vents-us.com

HARDI Sustaining Member

HVI MEMBER

2025-02

400 Murray Road, Cincinnati, OH 45217
Tel: 1-888-640-0925,
Fax: 513-583-5786

E-mail: Sales@Vents-us.com
support@vents-us.com
zoltan@vents-us.com

HARDI Sustaining Member

HVI MEMBER™

2025-02