VENTS-US

PRODUCT SPECIFICATIONS

TURBO TUBE 250 EC

INLINE MIXED FLOW FANS



MOTOR

High-efficient electronically commutated direct current motors combined with mixed-flow impellers. Such motors are the most state-of-the-art energy saving solution. Power consumption of EC motors is 35 % less as compared to standard motors. The fans with EC motors have excellent aerodynamic performance and low-noise operation.
EC motors are featured with high performance and total speed controllable range.
High efficiency reaching 90 % is the premium advantage of the electronically- commutated motors. The motors are equipped with ball bearings designed for at least 40 000 operating hours.

DESIGN

Durable, impact-resistant and corrosion-free ABS-plastic casing.
Aerodynamically shaped casing.
Airtight terminal box for connection to power mains.

SPEED CONTROL

The fan is operated with an 0-10 V control signal. (ordered separately). The air capacity can be controlled depending on air temperature, pressure level, smoke content, etc.
The speed of the EC motor changes proportionally to fluctuations of the control parameter and the fan delivers a required air volume to the ventilation system. Maximum fan speed does not depend on the current frequency.
The fans may be integrated into a building management systems. The specially designed software provides precise control of all the fans integrated into the system.

MOUNTING

The fans are designed for duct mounting in any point of the ventilation system with the casing mounted at any angle. In case of vertical mounting a protective outer hood must be installed on the top.
Fixation to the floor, wall or ceiling is performed with the supplied mounting brackets.
Electric connection and installation must be performed in compliance with the manual and the wiring diagram on the terminal box.

USE

Supply and exhaust ventilation and air conditioning systems of various premises requiring cost-saving controllable ventilation.
The best ventilation solution for exhaust ventilation of bathrooms, kitchens, pools, bars, restaurants, offices, manufacturing facilities, and more.
Compatible with Ø 8" round air ducts.

DIMENSIONS

Model	Measurements [in.]				Weight [lb]
	Ø D	B	H	L	
TT 250 EC	9 3/4"	11 5/16"	12 11/16"	15 1/16"	18.3

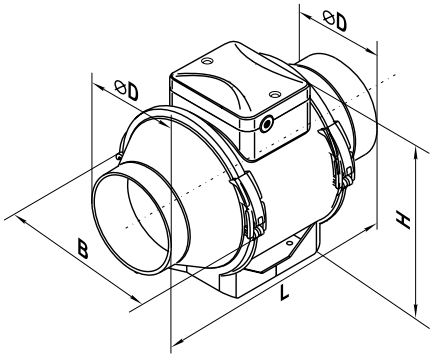

Tel: 888-640-0925
Fax: 513-583-5786

Sales@vents-us.com
Vents-US.com
400 Murray Rd,
Cincinnati, OH 45217

Intertek

HARDI

2025-02

TURBO TUBE 250 EC

INLINE MIXED FLOW FANS

PRODUCT SPECIFICATIONS

PERFORMANCE

Model	Duct dia	Energy Star compliance	RPM*	Sones	Watts*	Amps*	CFM vs. Static Pressure (Ps) in WG 10 V signal										Max Ps, in WG	Volts
							0"	0.125"	0.2"	0.25"	0.375"	0.5"	0.75"	1"	1.25"	1.5"		
TT 250 EC	10"	yes	2568	3.2	170.6	2.26	745	705	680	663	625	590	505	415	308	240	2.50	120

* The parameters RPM, Watts are indicated at 0.2 in WG static pressure.

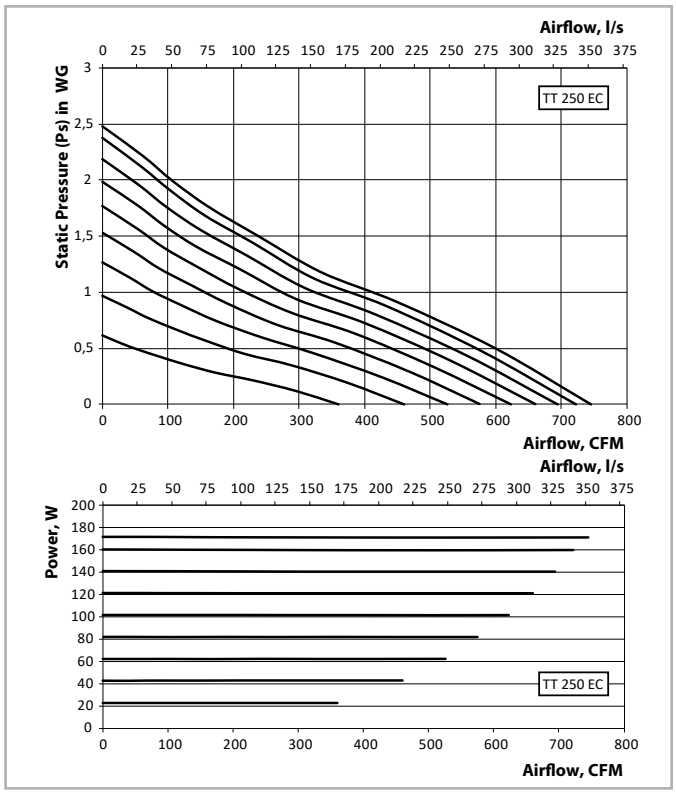

MODEL	QUANTITY	COMMENTS	PROJECT
			location:
			architect:
			engineer:
			contractor:
			submitted by:

Tel: 888-640-0925
Fax: 513-583-5786

Sales@vents-us.com
Vents-US.com
400 Murray Rd,
Cincinnati, OH 45217

Intertek

HARDI

2025-02