VENTS-US

PRODUCT SPECIFICATIONS

Frigate ERV 150

ENERGY RECOVERY VENTILATION

DESCRIPTION

VENTS' ERV 150 are the complete whole house ventilation system designed to bring a continuous supply of fresh air into the house while exhausting an equal amount of stale air.
Five year warranty.



CASING

- Steel casing is covered with high-quality multilayer aluminium and zinc alloy to prevent corrosion.
- The casing is equipped with a switch to turn the ventilator off when the service panel is opened.

AIR FILTRATION

- Washable MERV 6 air filters in exhaust and supply air streams.
- Optional supply: MERV 13 supply filter.

ENERGY RECOVERY CORE

Enthalpic core provides both heat&humidity recovery. For enthalpic core no drain required.

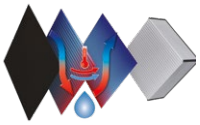

FANS

The unit is equipped with supply and exhaust centrifugal fans with forward curved blades and build-in thermal overheating protection with automatic restart. The electric motors and impellers are dynamically balanced.

DEFROST SYSTEM

To protect the Energy Recovery Core, an antifreeze electronic protection system is applied. It switches the supply fan off according to the temperature sensor settings. Warm extract air defrosts the ERV core then the supply fan switches on and the ventilator continues operating under rated conditions.

CONSTANT FLOW

Frigate ERV 150 CF has an automatic constant air flow control function to keep the air flow in supply and exhaust air ducts constant even in case of variable air resistance. This function is provided with the integrated air flow control units. The electronic sensors convert the actual air flow to the analogue signal that is proportional to the air flow in the air duct. These signals are transmitted to the controller that controls the rotation speed of a respective fan in such a way that the actual rotations speed is equal to the set value.

MANUAL BALANCING

Manual balancing is a standard balancing system. Fan speed manually adjusted by operating on units controller (Built-in control panel with independent fan speed adjustment 0%-100%).

CONTROL BOARD

The unit incorporates an integrated control system with following functions:

- Operation mode switch.
- Airflow balancing enabled by supply and exhaust fan independent speed adjustment from 0 to 100% (percentage is displayed on built in screen).
- Automatic recovery core frost protection.
- External control device connection (up to 5 at the same time).

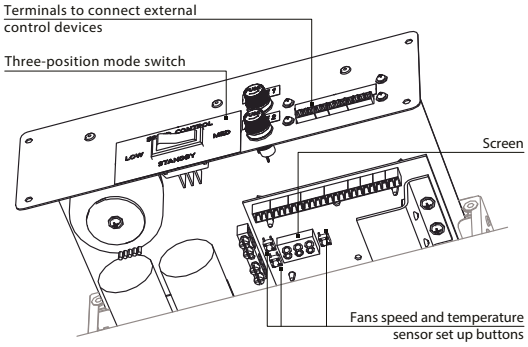

SUITABLE FOR:

Bathroom / kitchen / apartments / cottages / small offices.

Tel: 888-640-0925
Fax: 513-583-5786

Sales@Vents-us.com
Vents-US.com
400 Murray Rd,
Cincinnati, OH 45217

2100 HVI CERTIFIED

Intertek

HARDI

2025-02

VENTS-US

PRODUCT SPECIFICATIONS

Frigate ERV 150

ENERGY RECOVERY VENTILATION

PERFORMANCE

EXTERNAL STATIC PRESSURE		NET SUPPLY AIR FLOW		GROSS AIR FLOW				POWER*
				SUPPLY		EXHAUST		
Pa	in. W.G.	L/s	CFM	L/s	CFM	L/s	CFM	Watts
25	0.1	84	178	85	180	83	176	189
50	0.2	79	167	80	170	79	167	189
75	0.3	75	159	76	161	74	157	186
100	0.4	71	150	72	153	69	146	185
125	0.5	67	142	67	142	64	136	183
150	0.6	62	131	63	133	60	127	181
175	0.7	58	123	58	123	55	117	179
200	0.8	53	112	53	112	50	106	176
225	0.9	48	102	49	104	46	97	174
250	1	43	91	43	91	41	87	171

* - not HVi-certified

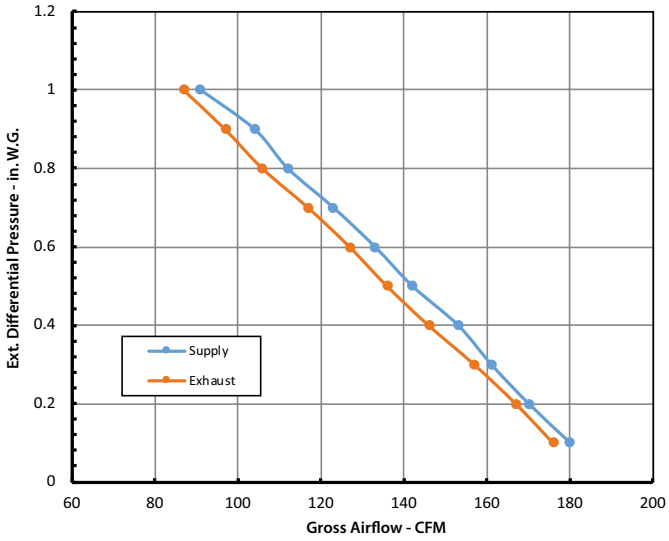

SOUND*
1.5 Sones (30 L/s @ 0.2 in. W.G.)

* - not HVi-certified

Temp Mode	Supply Temp (°C)	Supply Temp (°F)	Net Airflow (L/s)	Net Airflow (CFM)	Watts	SRE	ASRE	Latent Recovery/ Moisture Transfer	TRE*	ATRE*
HEATING	0	32	31	66	102	66	76	0.50		
HEATING	0	32	46	97	130	63	72	0.50		
HEATING	0	32	50	106	138	63	71	0.41		
COOLING	35	95	31	66	100			0.34	39	44
COOLING	35	95	46	97	132			0.31	35	40

* Indicates total recovery efficiency, not sensible recovery efficiency

MODEL	QUANTITY	COMMENTS	PROJECT
			location:
			architect:
			engineer:
			contractor:
			submitted by:

Tel: 888-640-0925
Fax: 513-583-5786

Sales@Vents-us.com
Vents-US.com
400 Murray Rd,
Cincinnati, OH 45217

2100 HVI CERTIFIED

Intertek

HARDI

2025-02

VENTS-US

PRODUCT SPECIFICATIONS

Frigate ERV 150

ENERGY RECOVERY VENTILATION

DIMENSIONS

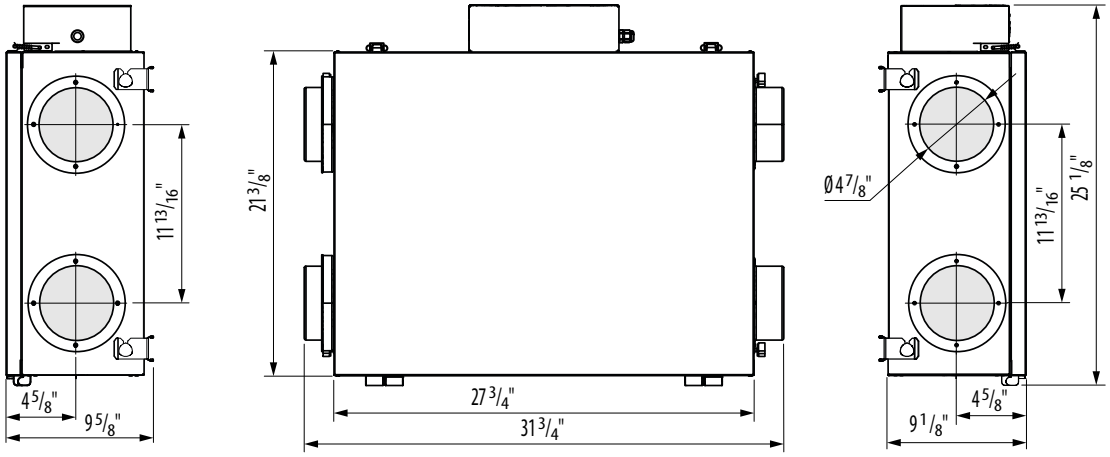

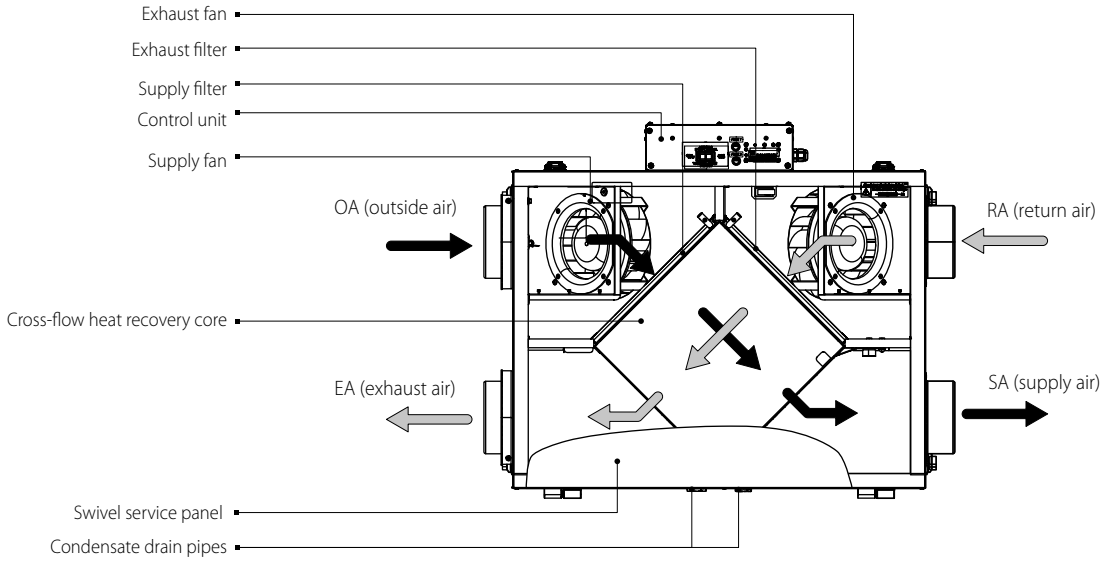

MODEL	QUANTITY	COMMENTS	PROJECT
			location:
			architect:
			engineer:
			contractor:
			submitted by:

Tel: 888-640-0925
Fax: 513-583-5786

Sales@Vents-us.com
Vents-US.com
400 Murray Rd,
Cincinnati, OH 45217

HVI CERTIFIED 2100

Intertek

HARDI

2025-02

MODEL	QUANTITY	COMMENTS	PROJECT
			location:
			architect:
			engineer:
			contractor:
			submitted by:

Tel: 888-640-0925
Fax: 513-583-5786
Sales@Vents-us.com
Vents-US.com
400 Murray Rd,
Cincinnati, OH 45217