PRODUCT SPECIFICATIONS

Frigate ERV 120 EC

ENERGY RECOVERY VENTILATION

DESCRIPTION

VENTS' ERV 120 EC are the complete whole house ventilation system designed to bring a continuous supply of fresh air into the house while exhausting an equal amount of stale air.
Five year warranty.



CASING

- Steel casing is covered with high-quality multilayer aluminium and zinc alloy to prevent corrosion.
- The casing is equipped with a switch to turn the ventilator off when the service panel is opened.

AIR FILTRATION

- Washable MERV 6 air filters in exhaust and supply air streams.
- Optional supply: MERV 13 supply filter.

ENERGY RECOVERY CORE

Enthalpic core provides both heat&humidity recovery. For enthalpic core no drain required.

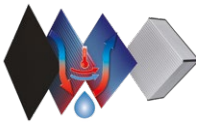

FANS

High efficient electronically commutated motors with external motor and impeller with forward curved blades. EC motors are featured with high performance and total speed controllable range. The electric motors and impellers are dynamically balanced.

DEFROST SYSTEM

To protect the Energy Recovery Core, an antifreeze electronic protection system is applied. It switches the supply fan off according to the temperature sensor settings. Warm extract air defrosts the ERV core then the supply fan switches on and the ventilator continues operating under rated conditions.

CONSTANT FLOW

Recirculation or only exhaust defrost modes are available.Frigate ERV 120 EC CF has an automatic constant air flow control function to keep the air flow in supply and exhaust air ducts constant even in case of variable air resistance. This function is provided with the integrated air flow control units. The electronic sensors convert the actual air flow to the analogue signal that is proportional to the air flow in the air duct. These signals are transmitted to the controller that controls the rotation speed of a respective fan in such a way that the actual rotations speed is equal to the set value.

MANUAL BALANCING

Manual balancing is a standard balancing system. Fan speed manually adjusted by operating on units controller (Built-in control panel with independent fan speed adjustment 0%-100%).

CONTROL BOARD

The unit incorporates an integrated control system with following functions:

- Operation mode switch.
- Airflow balancing enabled by supply and exhaust fan independent speed adjustment from 0 to 100% (percentage is displayed on built in screen).
- Automatic recovery core frost protection.
- External control device connection (up to 5 at the same time).

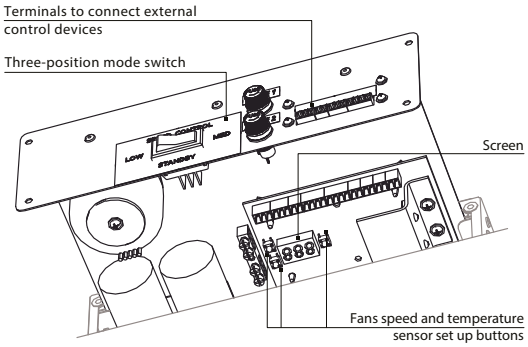

SUITABLE FOR:

Bathroom / kitchen / apartments / cottages / small offices.

Tel: 888-640-0925
Fax: 513-583-5786

Sales@vents-us.com
Vents-US.com
400 Murray Rd,
Cincinnati, OH 45217

2025-02

VENTS-US

PRODUCT SPECIFICATIONS

Frigate ERV 120 EC

ENERGY RECOVERY VENTILATION

PERFORMANCE

EXTERNAL STATIC PRESSURE		NET SUPPLY AIR FLOW		GROSS AIR FLOW				POWER*
				SUPPLY		EXHAUST		
Pa	in. W.G.	L/s	CFM	L/s	CFM	L/s	CFM	Watts
25	0.1	76	161	78	165	78	165	174
50	0.2	74	157	76	161	76	161	174
75	0.3	73	155	74	157	74	157	175
100	0.4	71	150	73	155	73	155	175
125	0.5	69	146	71	150	71	150	175
150	0.6	68	144	70	148	70	148	175
175	0.7	67	142	68	144	69	146	175
200	0.8	65	138	67	142	68	144	175
225	0.9	64	136	66	140	67	142	175
250	1	63	133	65	138	65	138	175

* - not HVi-certified

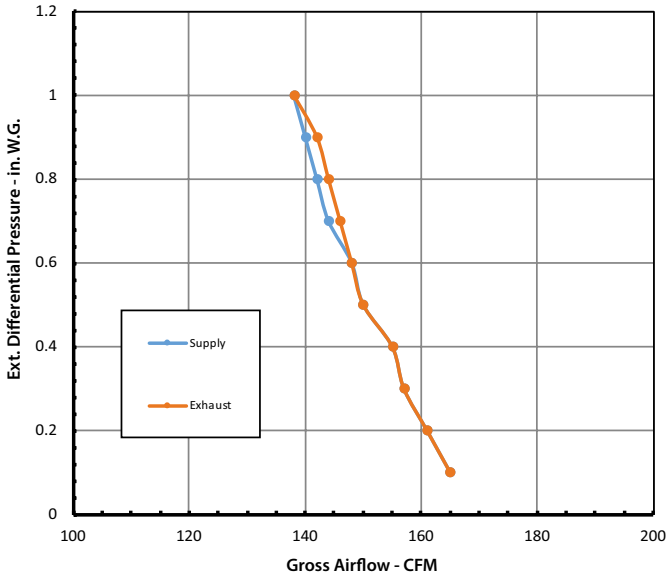

SOUND*
1.5 Sones (30 L/s @ 0.2 in. W.G.)

* - not HVi-certified

Temp Mode	Supply Temp (°C)	Supply Temp (°F)	Net Airflow (L/s)	Net Airflow (CFM)	Watts	SRE	ASRE	Latent Recovery/ Moisture Transfer	TRE*	ATRE*	VLTVR Supply	VLTVR Exhaust	Very Low Temp Airflow Imbalance
HEATING	0	32	23	49	18	71	73	0.17					
COOLING	35	95	23	49	18			0.24	39	41			

* Indicates total recovery efficiency, not sensible recovery efficiency

MODEL	QUANTITY	COMMENTS	PROJECT
			location:
			architect:
			engineer:
			contractor:
			submitted by:

Tel: 888-640-0925
Fax: 513-583-5786

Sales@vents-us.com
Vents-US.com
400 Murray Rd,
Cincinnati, OH 45217

HVI CERTIFIED

HARDI

2025-02

VENTS-US

PRODUCT SPECIFICATIONS

Frigate ERV 120 EC

ENERGY RECOVERY VENTILATION

DIMENSIONS

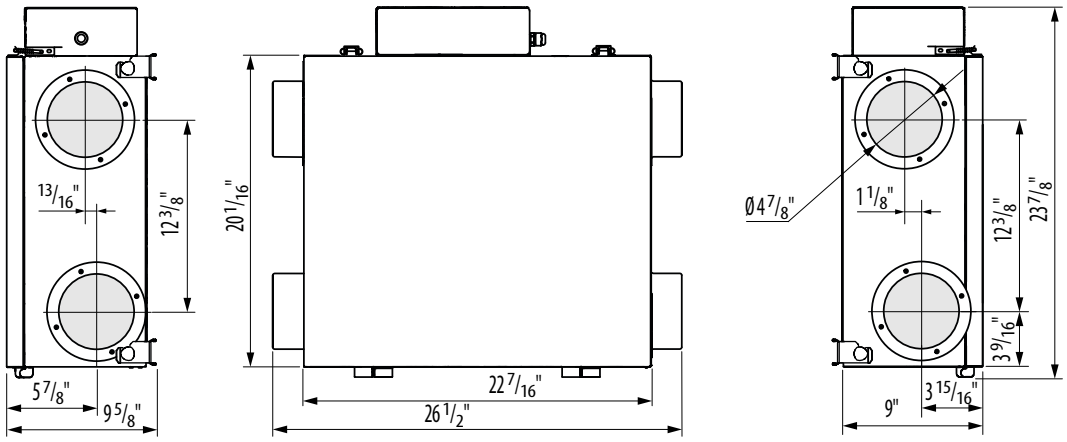

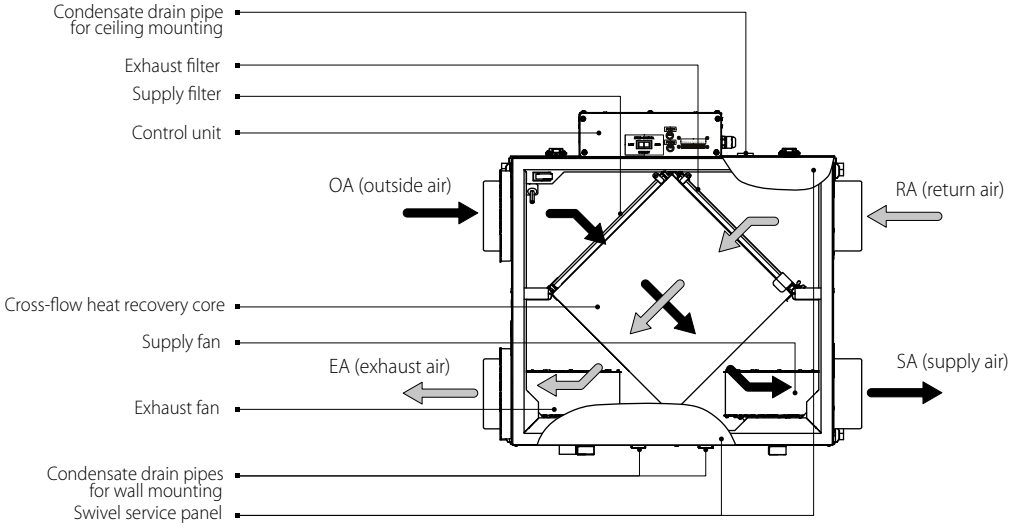

MODEL	QUANTITY	COMMENTS	PROJECT
			location:
			architect:
			engineer:
			contractor:
			submitted by:

Tel: 888-640-0925
Fax: 513-583-5786

Sales@vents-us.com
Vents-us.com
400 Murray Rd,
Cincinnati, OH 45217

HARDI

2025-02

MODEL	QUANTITY	COMMENTS	PROJECT
			location:
			architect:
			engineer:
			contractor:
			submitted by:

Tel: 888-640-0925
Fax: 513-583-5786
Sales@vents-us.com
Vents-US.com
400 Murray Rd,
Cincinnati, OH 45217