VENTS-US

PRODUCT SPECIFICATIONS

VKP 125

CENTRIFUGAL IN-LINE FANS



DESCRIPTION

VKP fans are specially designed for extract and input ventilation and are perfect air movement solution for areas with tight spaces. It provides small to medium airflow. The fans offer a variety of choices of extract and input ventilation options and enables ducting from multiple sources. Suitable for working airstreams 13-140 °F. Power cord included.
IPX4 Protection / Thermal Overload Protection.

CASING

The fan's housing is made of galvanized steel.

MOTOR

The external rotor motor on ball bearings and the backward curved, balanced impeller is suitable for high pressure application, prevent vibration and assure quiet operation.

SUITABLE FOR:

General purpose ventilation and dryer exhaust application.

DIMENSIONS

Model	Measurements [in.]					
	Ø D	Ø D1	A	L	B	H
VKP 125	5"	5"	13"	17"	13 17/64"	7 31/64"

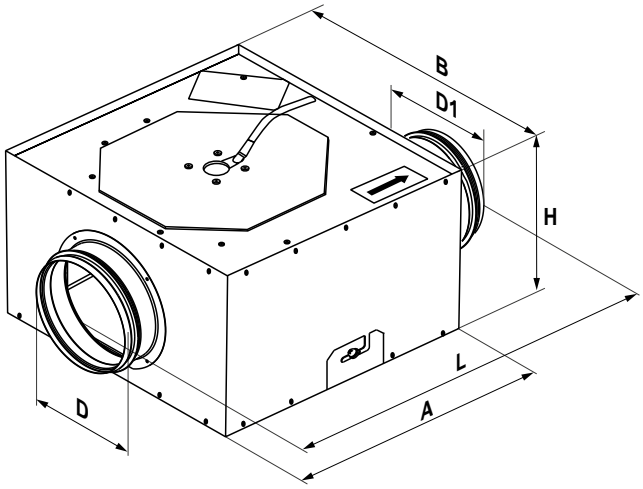

Tel: 888-640-0925
Fax: 513-583-5786

Sales@Vents-us.com
Vents-US.com
400 Murray Rd,
Cincinnati, OH 45217

Intertek

HARDI

2025-02

VENTS-US

PRODUCT SPECIFICATIONS

VKP 125

CENTRIFUGAL IN-LINE FANS

PERFORMANCE

Model	Duct dia	Watts*	Amps*	CFM vs. Static Pressure (Ps) in WG											Max. Ps	Volts / Hz
				0"	0.1"	0.2"	0.3"	0.4"	0.5"	0.6"	0.7"	0.8"	0.9"	1"		
VKP 125	5"	66	0.54	220	214	208	202	196	190	184	178	172	160	150	2.4	120 / 60

* Indicated at 0.2 in.W.G.

MODEL	QUANTITY	COMMENTS	PROJECT
			location:
			architect:
			engineer:
			contractor:
			submitted by:

Tel: 888-640-0925
Fax: 513-583-5786

Sales@Vents-us.com
Vents-US.com
400 Murray Rd,
Cincinnati, OH 45217

Intertek

HARDI

2025-02