VENTS-US

PRODUCT SPECIFICATIONS

VKM 250 EC

INLINE CENTRIFUGAL FAN



EC motor

DESCRIPTION

Energy Star compliant. Very high energy efficiency. Speed controllable 0-10 V (regulator is available upon separate order).
VENTS VKM EC inline centrifugal duct fans are designed for residential and commercial ventilation applications. The housing is made of steel with polymer coating. Efficient backward curved impeller is capable of operating in high pressure systems. In-line configuration simplifies installation. All VKM EC models are designed for standard diameter round ducting. VENTS VKM EC inline duct fans can eliminate many ventilation problems.
They are designed to boost airflow through long or complex duct runs. Provide ideal solutions for residential and commercial applications. The most common uses are bathroom exhaust, range hood exhaust and duct boosting. The VKM EC series fans are specifically for simple installation and maintenance free operation.

MOTOR

High-efficiency EC-motor, 0-10V controllable.
Motor is supplied with automatic reset thermal protection and is equipped with ball bearings for longer service life (40,000 hrs).
Suitable for air stream temperature from -13 °F to 105 °F.

SUITABLE FOR:

Bathroom exhaust; kitchen ventilation; living area; whole house ventilation; workshops & smoking areas; offices; bars & restaurants; warehouses; duct boosting.

CASING

Fan has a housing made of steel with polymer coating.

DIMENSIONS

Model	Measurements [in.]									lbs
	Ø D	Ø D1	H	B	B1	L	L1	L2	L3	
VKM 250 EC	9 49/64"	13 37/64"	17 1/8"	15 35/64"	13 31/32"	9 27/32"	63/64"	1 3/16"	1 37/64"	12.8

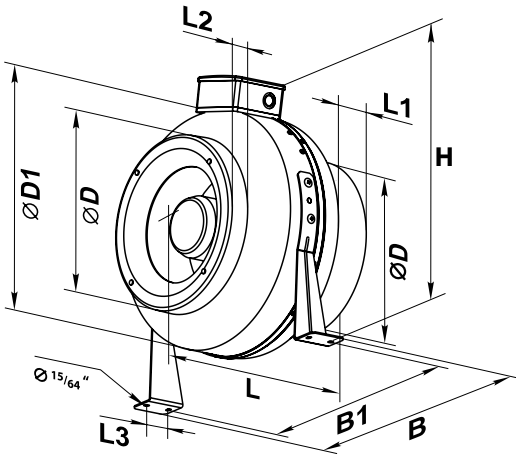

Tel: 888-640-0925
Fax: 513-583-5786

Sales@vents-us.com
Vents-US.com
400 Murray Rd,
Cincinnati, OH 45217

Intertek

HARDI

2025-02

VENTS-US

PRODUCT SPECIFICATIONS

VKM 250 EC

INLINE CENTRIFUGAL FAN

PERFORMANCE

Model	Current* [Amp]	Power* [W]	RPM*	Energy Star compliant	[Volts/Hz]
VKM 250 EC (120/60)	1.89	133.6	2628	Yes	120/60

* The parameters Volts, Watts, Amps are indicated at 0.2 in WG static pressure, max airflow

Model	CFM vs. Static Pressure (Ps) in WG 10V curve											Max Ps
	0"	0.125"	0.2"	0.25"	0.375"	0.5"	0.75"	1.0"	1.25"	1.5"	2.5"	
VKM 200 EC (120/60)	667	600	586	577	553	530	484	438	392	346	161	3.86

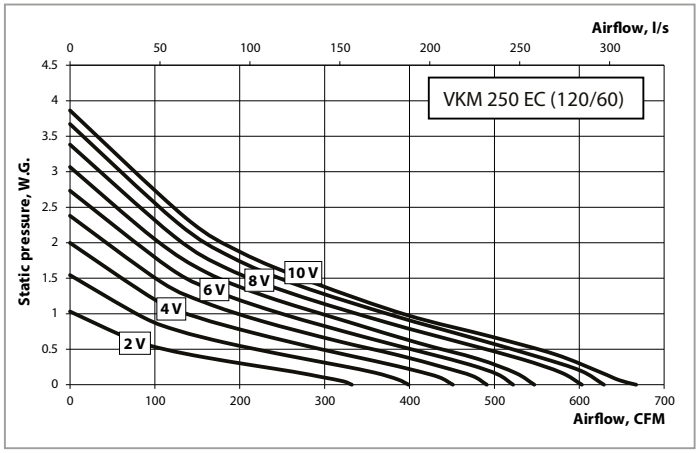

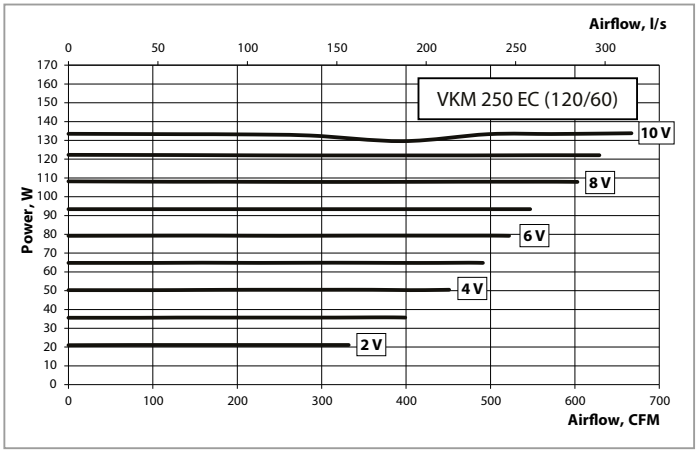

SPECIFICATION

Voltage: 120 V, 60 Hz
Motor: Efficient electronically commutated (EC) single-phase external rotor motor with backward curved centrifugal impeller
Duct compatibility: 10"
Airflow capacity: up to 667 CFM
Sones: 8.2

Power consumption: 133.6 W
Suitable for working airstreams up to 105°F
IPX4 protection
Thermal overload protection
Mounting bracket and power cord included
Energy Star compliant

MODEL	QUANTITY	COMMENTS	PROJECT
			location:
			architect:
			engineer:
			contractor:
			submitted by:

Tel: 888-640-0925
Fax: 513-583-5786

Sales@vents-us.com
Vents-US.com
400 Murray Rd,
Cincinnati, OH 45217

Intertek

HARDI

2025-02