USER'S MANUAL

Airvents RV

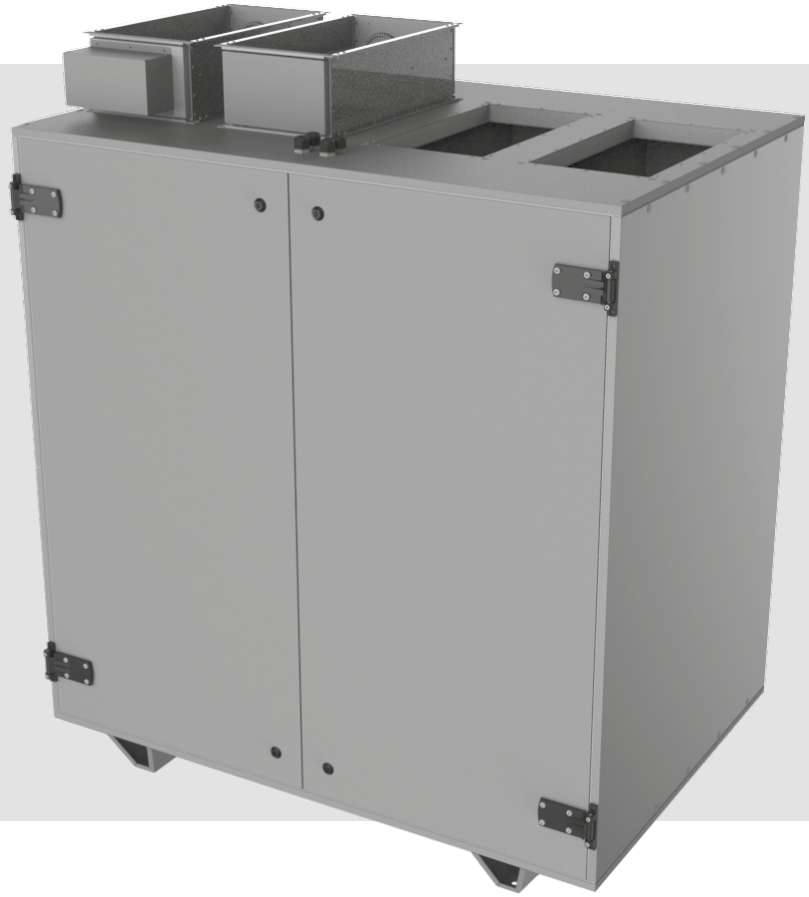

Air handling unit

VENTS

CONTENTS

Safety requirements ... 3
Purpose ... 5
Delivery set ... 5
Designation key ... 5
Technical data ... 6
Unit design ... 8
Installation and set-up ... 9
Connection to power mains ... 11
Technical maintenance ... 11
Storage and transportation regulations ... 12
Manufacturer's warranty ... 13
Certificate of acceptance ... 15
Seller information ... 15
Installation certificate ... 15
Warranty card ... 15

This user's manual is a main operating document intended for technical, maintenance, and operating staff.
The manual contains information about purpose, technical details, operating principle, design, and installation of the Airvents RV unit and all its modifications.
Technical and maintenance staff must have theoretical and practical training in the field of ventilation systems and should be able to work in accordance with workplace safety rules as well as construction norms and standards applicable in the territory of the country.

SAFETY REQUIREMENTS

- Please read the user's manual carefully prior to installing and operating the unit.
- All user's manual requirements as well as the provisions of all the applicable local and national construction, electrical, and technical norms and standards must be observed when installing and operating the unit.
- The warnings contained in the user's manual must be considered most seriously since they contain vital personal safety information.
- Failure to follow the rules and safety precautions noted in this user's manual may result in an injury or unit damage.
- After a careful reading of the manual, keep it for the entire service life of the unit.
- While transferring the unit control, the user's manual must be turned over to the receiving operator.

UNIT INSTALLATION AND OPERATION SAFETY PRECAUTIONS



- Disconnect the unit from power mains prior to any installation operations.



- The unit must be grounded!



- Do not change the power cable length at your own discretion.
- Do not bend the power cable.
- Avoid damaging the power cable.
- Do not put any foreign objects on the power cable.

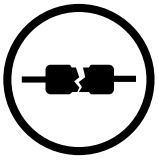

- Do not use damaged equipment or cables when connecting the unit to power mains.



- Do not touch the unit controls with wet hands.
- Do not carry out the installation and maintenance operations with wet hands.



- Unpack the unit with care.



- While installing the unit, follow the safety regulations specific to the use of electric tools.



- Do not lay the power cable of the unit in close proximity to heating equipment.



- Do not operate the unit outside the temperature range stated in the user's manual.
- Do not operate the unit in aggressive or explosive environments.



- Do not wash the unit with water.
- Protect the electric parts of the unit against ingress of water.



- Do not allow children to operate the unit.



- Do not store any explosive or highly flammable substances in close proximity to the unit.

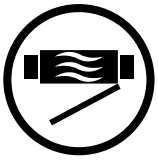

- Do not open the unit during operation.



- Do not block the air duct when the unit is switched on.

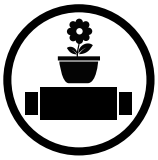

- Do not sit on the unit and avoid placing foreign objects on it.



- Disconnect the unit from power mains prior to any technical maintenance.



- When the unit generates unusual sounds, odour, or emits smoke, disconnect it from power supply and contact the Seller.



- Do not direct the air flow produced by the unit towards open flame or ignition sources.



- In case of continuous operation of the unit, periodically check the security of mounting.



- Use the unit only for its intended purpose.



THE PRODUCT MUST BE DISPOSED SEPARATELY AT THE END OF ITS SERVICE LIFE.

DO NOT DISPOSE THE UNIT AS UNSORTED DOMESTIC WASTE.

PURPOSE

The air handling unit with heat recovery is designed for integration into central mechanical ventilation systems.
The unit is rated for continuous operation.
Transported air must not contain any flammable or explosive mixtures, evaporation of chemicals, sticky substances, fibrous materials, coarse dust, soot and oil particles or environments favourable for the formation of hazardous substances (toxic substances, dust, pathogenic germs).

THE UNIT SHOULD NOT BE OPERATED BY CHILDREN OR PERSONS WITH REDUCED PHYSICAL, MENTAL, OR SENSORY CAPACITIES, OR THOSE WITHOUT THE APPROPRIATE TRAINING.

THE UNIT MUST BE INSTALLED AND CONNECTED ONLY BY PROPERLY QUALIFIED PERSONNEL AFTER THE APPROPRIATE BRIEFING.

THE CHOICE OF UNIT INSTALLATION LOCATION MUST PREVENT UNAUTHORISED ACCESS BY UNATTENDED CHILDREN.

DELIVERY SET

Name	Number
Unit	1 pc.
User's manual	1 pc.
Technical data sheet	1 pc.
Automation wiring	1 pc.
Control panel - according to the kit ordered	1 pc.
User's manual for automation	1 pc.
Packing box	1 pc.

DESIGNATION KEY

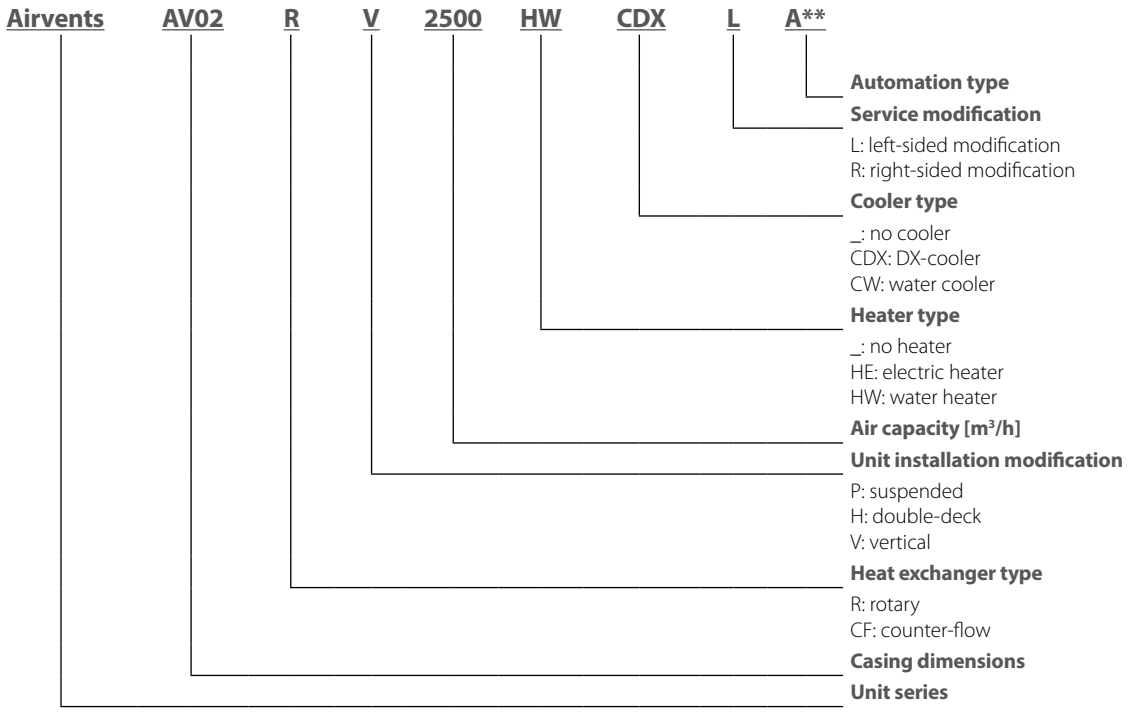

TECHNICAL DATA

The unit is designed for indoor or sheltered use. The installation conditions must prevent ingress of atmospheric precipitations and direct solar radiation at the ambient temperatures from -35 °C up to +50 °C. The frost protection for the water drainage and connected pipelines must be provided during sub-zero ambient temperatures (if the unit is equipped with an air cooler). The heat medium temperature in the water heat exchangers (if available) must be sufficient to prevent its freezing.

Hazardous parts access and water ingress protection rating:

- IP54 for the unit motors
- IP40 for the assembled unit connected to the air ducts without extra cover or weather hoods
- IP44 for the assembled unit with connected air ducts, extra cover and weather hoods (specially ordered accessories)
- IP00 for the unit not connected to the air ducts

The unit design is constantly being improved, thus some models may be slightly different from those described in this manual.

UNIT OVERALL DIMENSIONS

RV 1500/2500/3500/5000/6000

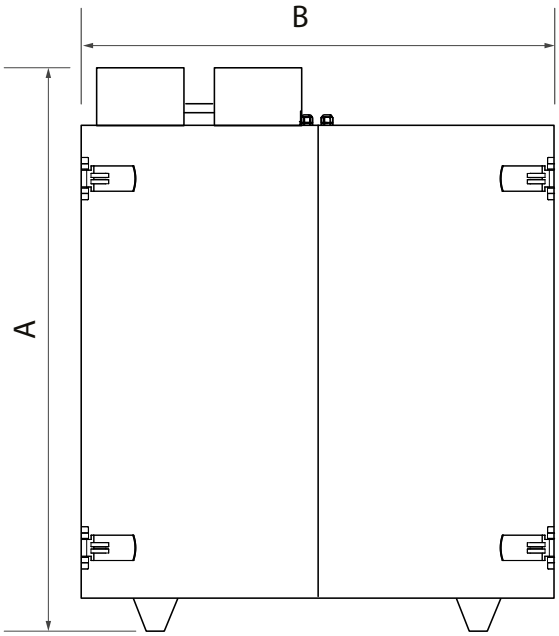

RV 800/1200

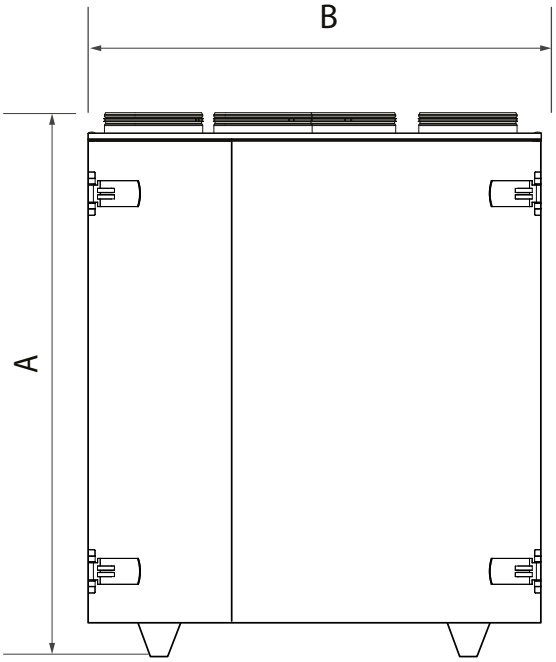

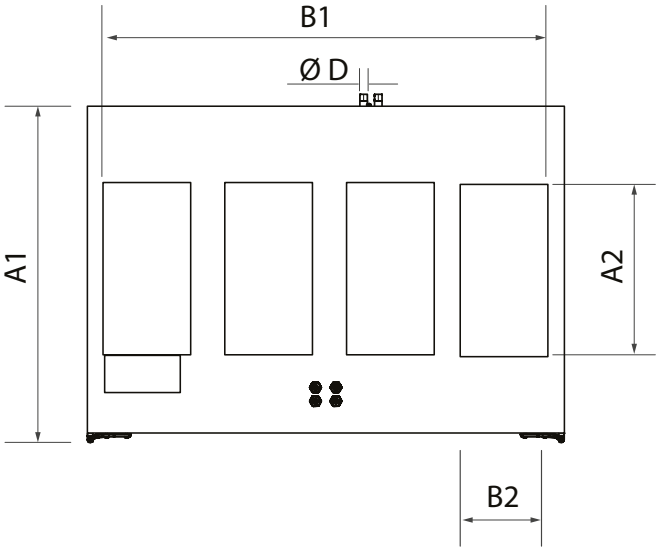

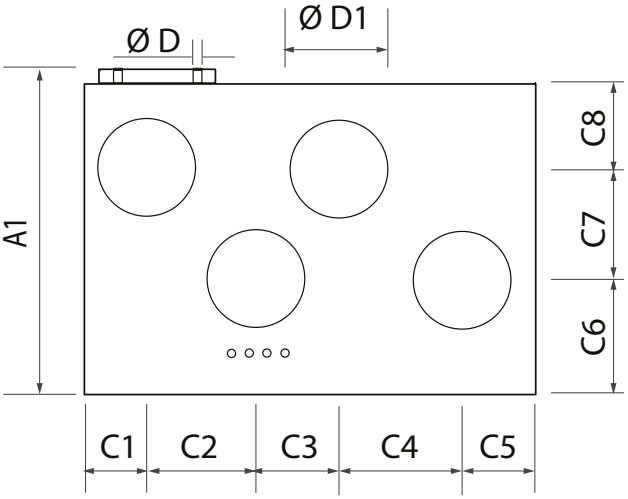

Model	A	A1	A2	B	B1	B2	C1	C2	C3	C4	C5	C6	C7	C8	D	D1
AV01 RV 800-R(L) AV01 RV 1200-R(L)	1403	785	—	1140	—	—	165	103	63	124	62	170	114	90	—	250
AV01 RV 800-HE-R(L) AV01 RV 1200-HE-R(L)																
AV01 RV 800-HW-R(L) AV01 RV 1200-HW-R(L)															3/4′	
AV02 RV 1500-R(L) AV02 RV 2500-R(L)	1672	986	500	1400	1304	250	—								—	—
AV02 RV 1500-HE-R(L) AV02 RV 2500-HE-R(L)																
AV02 RV 1500-HW-R(L) AV02 RV 2500-HW-R(L)															3/4′	
AV03 RV 3500-R(L)	2191	1286	600	1600	1504	300									—	
AV03 RV 3500-HE-R(L)																
AV03 RV 3500-HW-R(L)															3/4′	
AV07 RV 5000-R(L) AV07 RV 6000-R(L)	2360	1416	1000	1910	1804	350									—	
AV07 RV 5000-HE-R(L) AV07 RV 6000-HE-R(L)																
AV07 RV 5000-HW-R(L) AV07 RV 6000-HW-R(L)															1′	

The full technical data list is stated in the supplied technical data sheet.

UNIT DESIGN

RV 800/1200

Without heaters

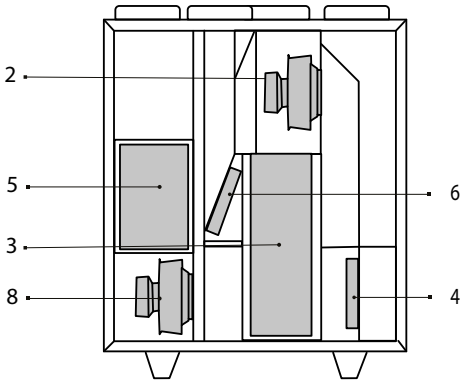

With electric heater

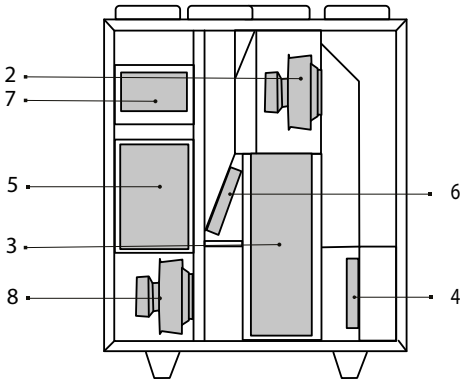

With water heater

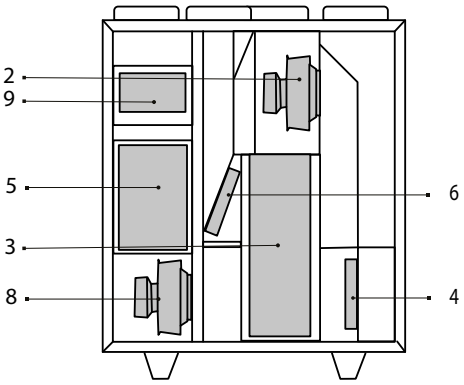

RV 1500/2500

Without heaters

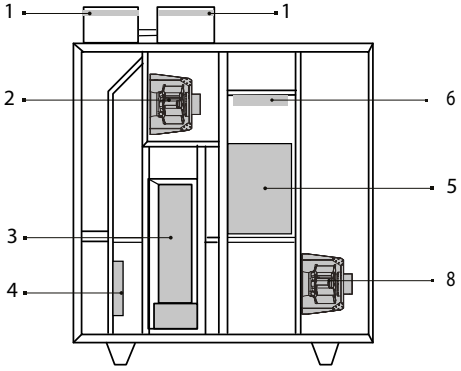

With electric heater

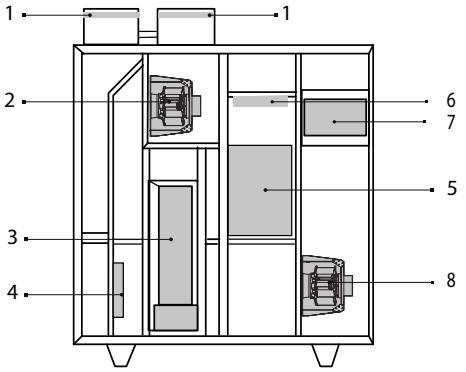

With water heater

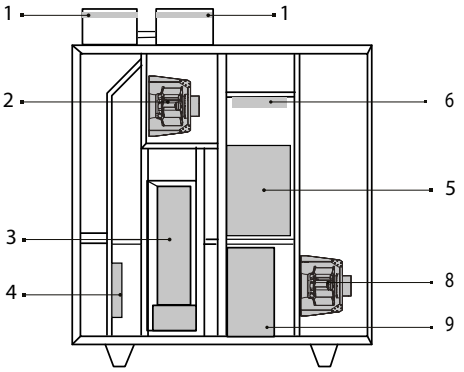

RV 3500/5000/6000

Without heaters

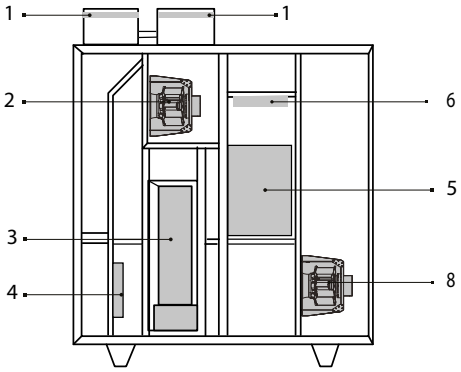

With electric heater

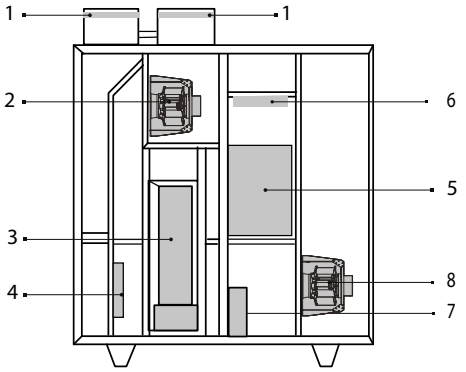

With water heater

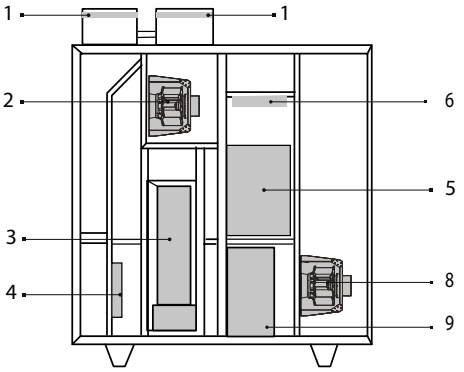

1: protective dampers with electric actuator
2: extract fan
3: rotary heat exchanger
4: supply filter
5: control unit
6: extract filter
7: electric heater (only for the models with electric heater)
8: supply fan
9: water heater (only for the units with water heater)

INSTALLATION AND SET-UP

ALL OPERATIONS DESCRIBED IN THIS USER'S MANUAL MUST BE PERFORMED BY QUALIFIED PERSONNEL ONLY, PROPERLY TRAINED AND QUALIFIED TO INSTALL AND MAINTAIN VENTILATION EQUIPMENT.

DO NOT ATTEMPT TO INSTALL THE PRODUCT YOURSELF.

IT IS UNSAFE AND IMPOSSIBLE WITHOUT SPECIAL KNOWLEDGE

The units are available in left- and right-sided modifications with the right or left service side. All the assembly units are accessible on the service side.

RV 800/1200

Left-sided modification

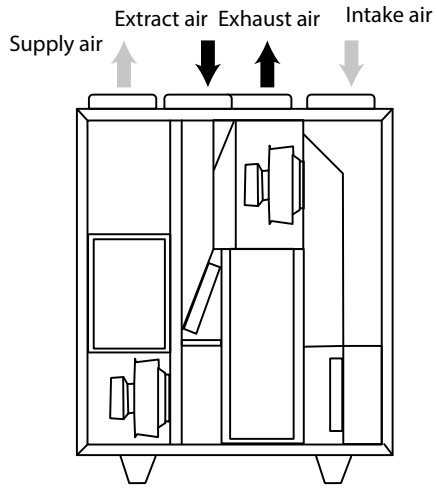

Right-sided modification

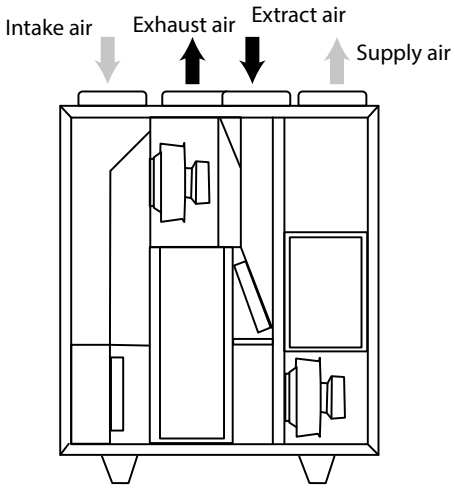

RV 1500/2500/3500/5000/6000

Left-sided modification

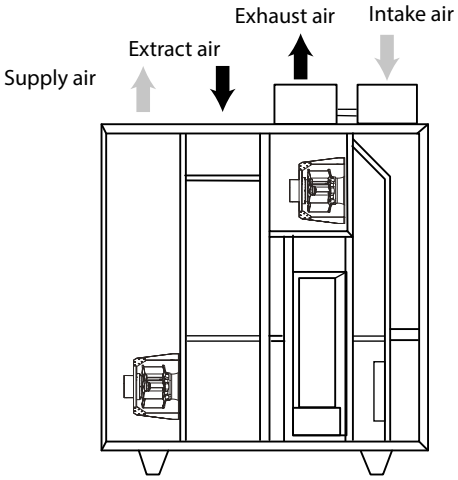

Right-sided modification

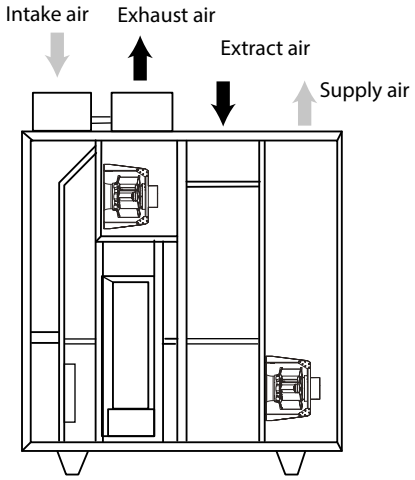

During installation works sufficient maintenance and service access must be provided. The recommended minimum distances from the unit to the walls are shown below.

For the models with a water heater (top view)

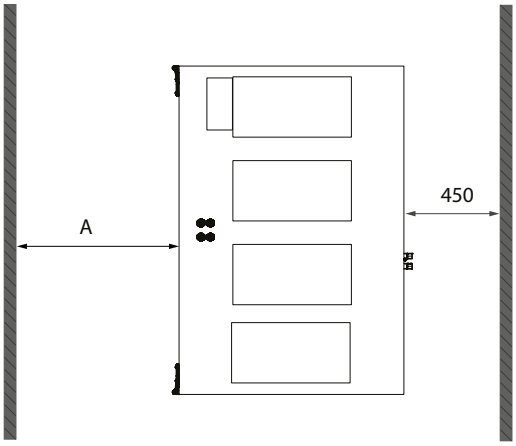

For the models without water heater (top view)

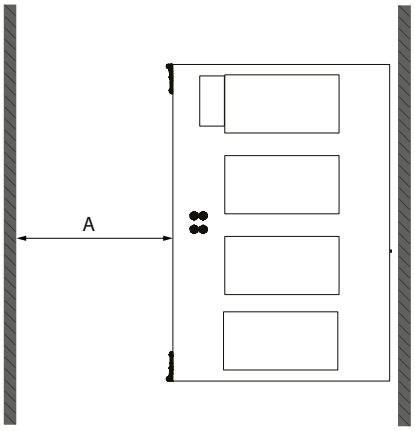

Casing dimensions	A, mm
AV01 RV	800
AV02 RV	
AV03 RV	900
AV07 RV	1000

The unit must be mounted to an even installation surface, with a loading capacity matching the unit weight, in compliance with safety requirements. The delivery set includes removable levelling feet to adjust horizontal levelling of the unit.

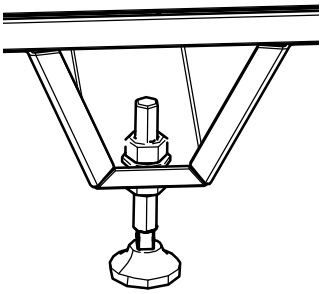

Connection of the water heater (only for the models with water heater.

The connecting spigots for the water heater are located on the side opposite to the service side.

While connecting the water heater keep the straight air duct section length not less than 400 mm from the unit. Otherwise the maintenance panel cannot be opened!

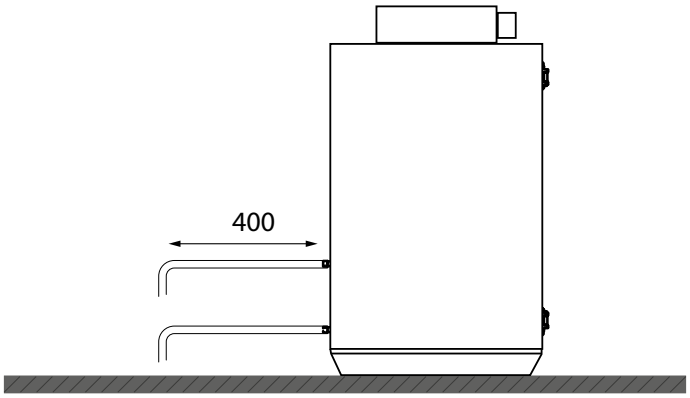

Connection diagram to municipal water mains

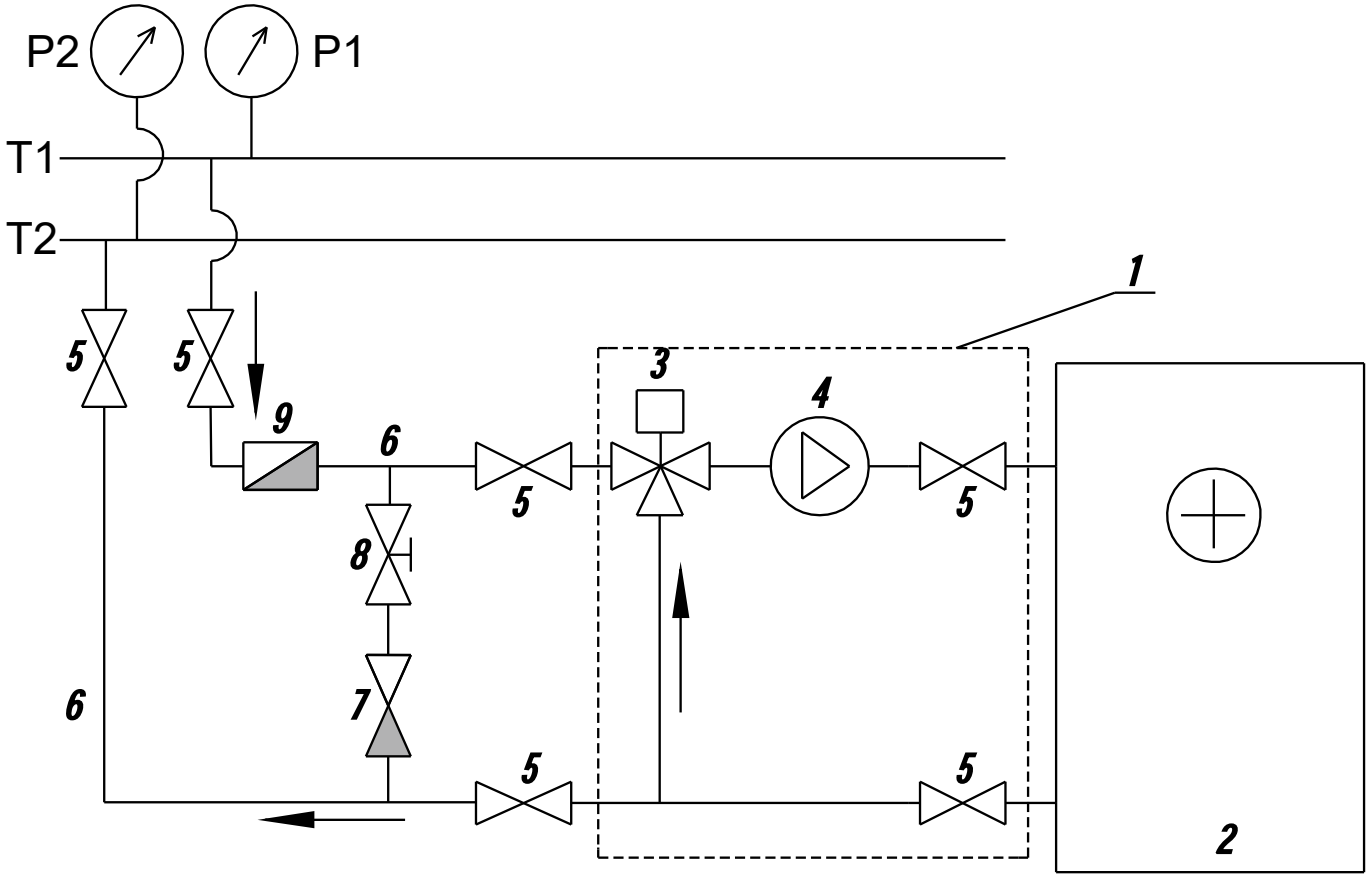

T1 and T2 - supply and return pipelines of heating/cooling system
P1 and P2 - liquid pressure gages in the heat distribution system
1 - USWK mixing unit
2 - water heater
3 - three-way valve with actuator
4 - circulation pump
5 - shut-off valve
6 - supply and return pipeline connection between heating system and water heater
7 - non-return valve
8 - balancing valve
9 - coarse filter

CONNECTION TO POWER MAINS

Connection to power mains must be conducted in compliance with the automation user's manual.

TECHNICAL MAINTENANCE

OPEN THE UNIT FOR INSPECTION AND SERVICE NOT LESS THAN 2 MINUTES AFTER COMPLETE DE-ENERGIZING OF THE UNIT.
THE FANS ROTATION MAY BE STILL PRESENT.

IN CASE OF ANY ABNORMAL NOISE, SMELL AND COMPONENT DEFORMATION IMMEDIATELY CUT OFF POWER SUPPLY TO THE UNIT AND CONTACT A SERVICE PROVIDER OR THE UNIT SELLER.

The unit operation requires regular inspection, dry cleaning of inner components, check-up and replacement of air filters in case of filter contamination.
3-6 months after commissioning of the unit it must be inspected by a service expert for planned preventive maintenance of the unit. Next maintenance operations must be conducted at least every 6-12 months. Maintenance periodicity is determined by a service expert depending on operation conditions of the unit. Dust deposits on the inner parts of the unit, especially in the electric heater, may lead to unpleasant odours.
It is not a malfunction. Clean the unit to troubleshoot unpleasant odours.

Filters
Open the service doors to access the filters and pull the filters from the unit.

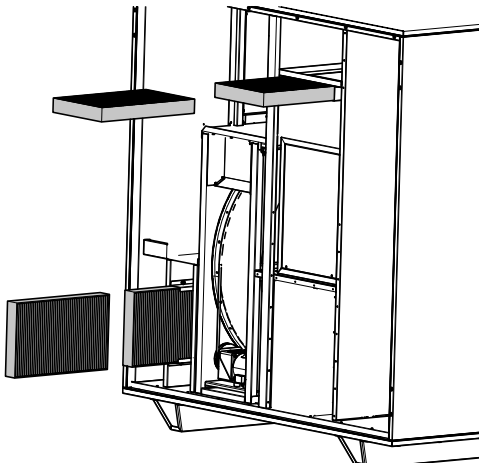

Remove the service panel to access the heat exchanger. Disconnect the socket from the actuator. Remove the heat exchanger.

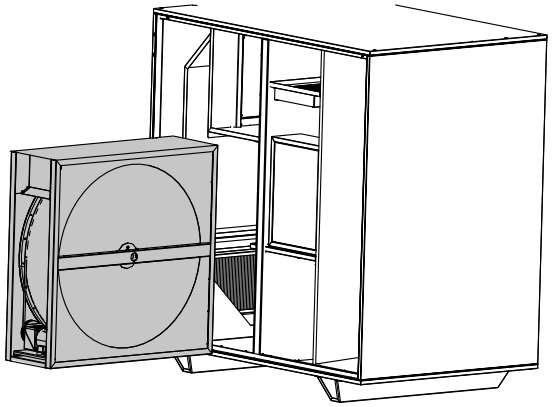

STORAGE AND TRANSPORTATION REGULATIONS

- Store the unit in the manufacturer's original packaging box in a dry closed ventilated premise with temperature range +5...+40 ˚C and relative humidity up to 70 %.
- Storage environment must not contain aggressive vapors and chemical mixtures provoking corrosion, insulation, and sealing deformation.
- Use suitable hoist machinery for handling and storage operations to prevent possible damage to the unit.
- Follow the handling requirements applicable for the particular type of cargo.
- The unit can be carried in the original packaging by any mode of transport provided proper protection against precipitation and mechanical damage. The unit must be transported only in the working position.
- Avoid sharp blows, scratches, or rough handling during loading and unloading.
- Prior to the initial power-up after transportation at low temperatures, allow the unit to warm up at operating temperature for at least 3-4 hours.

MANUFACTURER'S WARRANTY

The product is in compliance with EU norms and standards on low voltage guidelines and electromagnetic compatibility. We hereby declare that the product complies with the provisions of Electromagnetic Compatibility (EMC) Directive 2014/30/EU of the European Parliament and of the Council, Low Voltage Directive (LVD) 2014/35/EU of the European Parliament and of the Council and CE-marking Council Directive 93/68/EEC. This certificate is issued following test carried out on samples of the product referred to above.
The manufacturer hereby warrants normal operation of the unit for 24 months after the retail sale date provided the user's observance of the transportation, storage, installation, and operation regulations. Should any malfunctions occur in the course of the unit operation through the Manufacturer's fault during the guaranteed period of operation, the user is entitled to get all the faults eliminated by the manufacturer by means of warranty repair at the factory free of charge. The warranty repair includes work specific to elimination of faults in the unit operation to ensure its intended use by the user within the guaranteed period of operation. The faults are eliminated by means of replacement or repair of the unit components or a specific part of such unit component.

The warranty repair does not include:
- routine technical maintenance
- unit installation/dismantling
- unit setup

To benefit from warranty repair, the user must provide the unit, the user's manual with the purchase date stamp, and the payment paperwork certifying the purchase. The unit model must comply with the one stated in the user's manual. Contact the Seller for warranty service.

The manufacturer's warranty does not apply to the following cases:
- User's failure to submit the unit with the entire delivery package as stated in the user's manual including submission with missing component parts previously dismounted by the user.
- Mismatch of the unit model and the brand name with the information stated on the unit packaging and in the user's manual.
- User's failure to ensure timely technical maintenance of the unit.
- Damage to the unit casing and internal components caused by the user.
- Redesign or engineering changes to the unit.
- Replacement and use of any assemblies, parts and components not approved by the manufacturer.
- Unit misuse.
- Violation of the unit installation regulations by the user.
- Violation of the unit control regulations by the user.
- Unit connection to power mains with a voltage different from the one stated in the user's manual.
- Unit breakdown due to voltage surges in power mains.
- Discretionary repair of the unit by the user.
- Unit repair by any persons without the manufacturer's authorization.
- Expiration of the unit warranty period.
- Violation of the unit transportation regulations by the user.
- Violation of the unit storage regulations by the user.
- Wrongful actions against the unit committed by third parties.
- Unit breakdown due to circumstances of insuperable force (fire, flood, earthquake, war, hostilities of any kind, blockades).
- Missing seals if provided by the user's manual.
- Failure to submit the user's manual with the unit purchase date stamp.
- Missing payment paperwork certifying the unit purchase.



FOLLOWING THE REGULATIONS STIPULATED HEREIN WILL ENSURE A LONG AND TROUBLE-FREE OPERATION OF THE UNIT



USER'S WARRANTY CLAIMS SHALL BE SUBJECT TO REVIEW ONLY UPON PRESENTATION OF THE UNIT, THE PAYMENT DOCUMENT AND THE USER'S MANUAL WITH THE PURCHASE DATE STAMP

CERTIFICATE OF ACCEPTANCE

Unit Type	Air handling unit
Model	
Serial Number	
Manufacture Date	
Quality Inspector's Stamp	

SELLER INFORMATION

Seller	
Address	
Phone Number	
E-mail	
Purchase Date	
This is to certify acceptance of the complete unit delivery with the user's manual. The warranty terms are acknowledged and accepted.	
Customer's Signature	

Seller's Stamp

INSTALLATION CERTIFICATE

The _____ unit is installed pursuant to the requirements stated in the present user's manual.		
Company name		
Address		
Phone Number		
Installation Technician's Full Name		
Installation Date:	**Signature:**	
The unit has been installed in accordance with the provisions of all the applicable local and national construction, electrical and technical codes and standards. The unit operates normally as intended by the manufacturer.		
Signature:		

Installation Stamp

WARRANTY CARD

Unit Type	Air handling unit
Model	
Serial Number	
Manufacture Date	
Purchase Date	
Warranty Period	
Seller	

Seller's Stamp



Manufacturer: Ventilation Systems LLC,
Ukraine, Kyiv, 1 M. Kotsyubynskoho Street
Address of production facilities:
Ukraine, Kyiv Region, Fastiv District, Boyarka, 36 Sobornosti Street

V192-4EN-02