USER'S MANUAL

Airvents AV(S) CFP

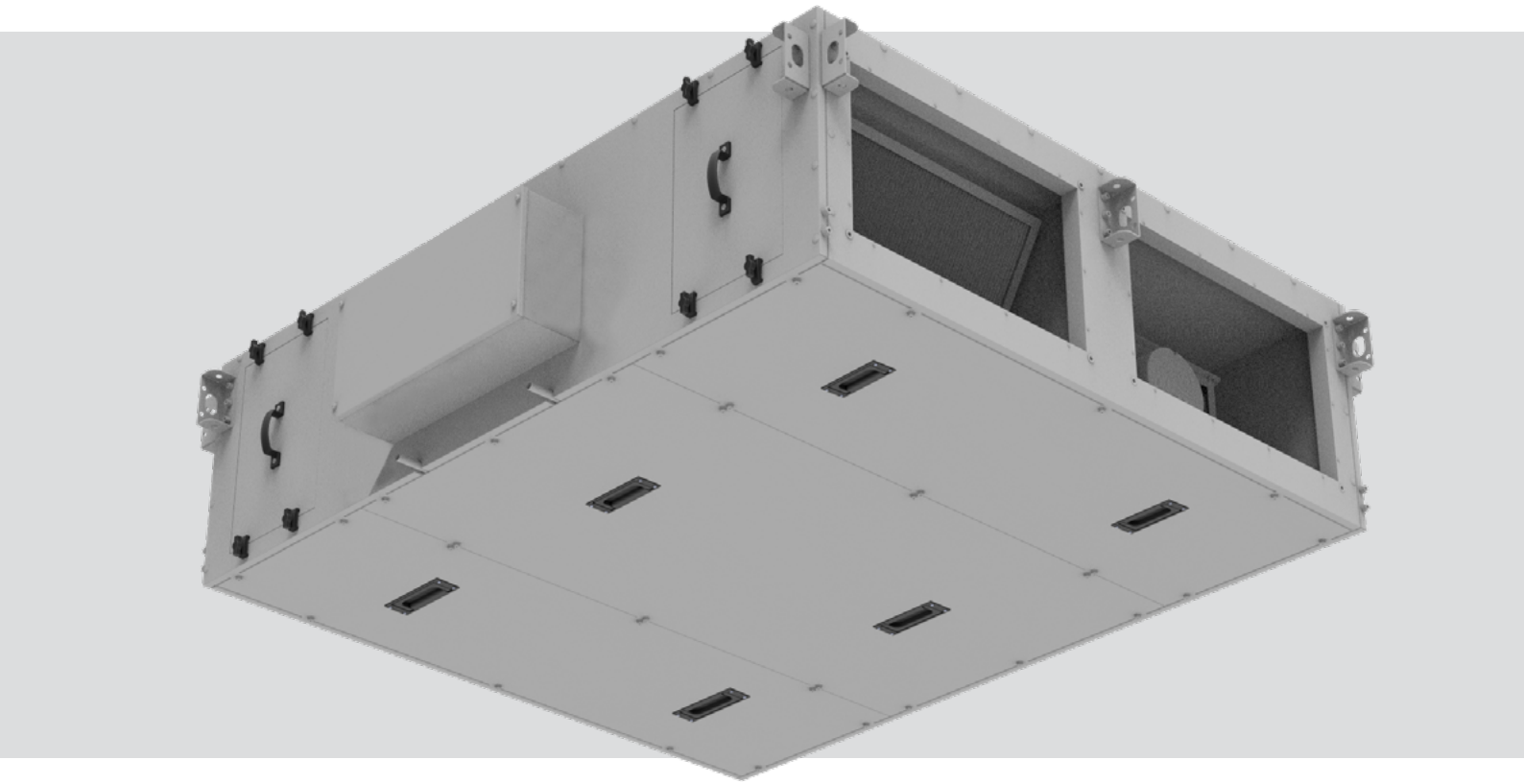

Air handling unit

CONTENTS

Safety requirements ... 2
Unit types and sizes ... 4
Designation key ... 5
Units' components and design ... 6
Accessories ... 7
Unit transportation ... 10
Mechanical mounting ... 11
Space for maintenance ... 12
Door handles and holders ... 12
Connection of accessories ... 13
Connecting ventilation hoods and inline parts to the unit ... 13
Preheater installation ... 14
Connecting the heater and cooler sections ... 15
Connecting the drain pipe ... 16
Control unit ... 18
Starting setup ... 18
Trial run ... 19
Maintenance ... 20
Storage and transportation regulations ... 27
Manufacturer's warranty ... 28
Certificate of acceptance ... 31
Seller information ... 31
Installation certificate ... 31
Warranty card ... 31

This manual is designed for qualified professionals performing installation works on an Airvents AV(S) CFP ventilation unit.
Persons that have sufficient professional experience and knowledge on ventilation systems, their installation, as well as are qualified in electric security requirements and can work without causing collateral danger to others and the evnironment are considered qualified professionals.

SAFETY REQUIREMENTS

This unit is not intended for use by persons (including children) with reduced physical, sensory or mental capabilities, or lack of experience and knowledge, unless they have been given supervision or instruction concerning use of the unit by a person responsible for their safety. Children should be supervised to ensure that they do not play with the unit.
This appliance can be used by children aged from 8 years and above and persons with reduced physical, sensory or mental capabilities or lack of experience and knowledge if they have been given supervision or instruction concerning use of the appliance in a safe way and understand the hazards involved.
Cleaning and user maintenance shall not be done by children without supervision.
Children shall not play with the appliance.

Connection to the mains must be made through a disconnecting device, which is integrated into the fixed wiring system in accordance with the wiring rules for design of electrical units, and has a contact separation in all poles that allows for full disconnection under overvoltage category III conditions.

CAUTION: In order to avoid a safety hazard due to inadvertent resetting of the thermal cut-out, this unit must not be supplied through an external switching device, such as a timer, or connected to a circuit that is regularly switched on and off by the utility.

Ensure that the unit is switched off from the supply mains before removing the guard.

Precautions must be taken to avoid the back-flow of gases into the room from the open flue of gas or other fuel-burning appliances.

The appliance may adversely affect the safe operation of appliances burning gas or other fuels (including those in other rooms) due to back flow of combustion gases. These gases can potentially result in carbon monoxide poisoning. After installation of the unit the operation of flued gas appliances should be tested by a competent person to ensure that back flow of combustion gases does not occur.

Carefully read this manual before installing the unit.
Ventilation units can only be installed by a qualified professional in accordance with the present user's manual as well as the provisions of all the applicable legal codes and security requirements.
The ventilation unit is an electrical and mechanical device containing electrical and moving parts, so failure to follow the presented instructions in the manual voids the manufacturer's warranty and may be harmful to human health or property.



- Ensure the unit is disconnected from power mains prior to any operations.
- Be careful when working near heaters that are located in or on the unit as their surfaces may be hot.
- Install all the external nodes of the unit before connecting it to the power pains.
- Do not connect the unit to the power pains if there is any visible damage caused by transportation.
- Do not leave any foreign objects or tools inside the unit.
- Do not operate the unit in rooms with a high risk of explosive emissions.
- Use adequate individual protection means (gloves, goggles etc.) while mounting or repairing.

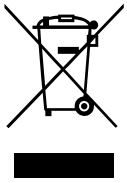

This symbol signifies that the unit cannot be disposed with unsorted domestic waste according to the Directive (2002/96/EC) and local national legal acts regarding electric waste.
This product must be disposed in an electric waste processing or collection facility.
Failure to adequately process this type of waste may be harmful to environment or human health due to presence of hazardous substances.
By ensuring proper disposal of the product you contribute to reasonable use of natural resources.
If you need further details on the disposal of certain waste types, contact local authorities, waste processing facilities, representatives of certified electrical waste disposal systems or local domestic waste processing institutions.

UNIT TYPES AND SIZES

The unit's main purpose is high-quality indoor ventilation. The ventilation unit extracts stale air from the room, along with the carbon dioxide accumulated in it, allergens, and dust, while also replacing it with fresh supply air purified by filtering. Since supply air is often colder or warmer than indoor air, the heat exchanger that is built in the unit takes heat from the extract air and recovers most of it to the supply air. If the power of the heat exchanger is insufficient to reach the temperature specified by the user, additional heaters / coolers may be turned on.

THE HEAT EXCHANGER AND HEATER (COOLER) ARE DESIGNED TO COMPENSATE FOR HEAT / COLD LOSSES WHILE VENTILATING ROOMS, SO IT IS NOT RECOMMENDED TO USE THE UNIT AS THE MAIN SOURCE OF HEAT / COLD FOR THE ROOM.

THE UNIT MAY NOT REACH THE SET SUPPLY AIR TEMPERATURE IF THE REAL INDOOR TEMPERATURE IS SIGNIFICANTLY DIFFERENT FROM THE DESIRED ONE, SINCE IN THIS CASE EFFICIENT OPERATION OF THE HEAT EXCHANGER CANNOT BE ENSURED.

The ventilation units AV(S) CFP are equipped with a plate counter-flow heat exchanger.
The plates of the heat exchanger touch both supply and extract air flows, thus enabling heat exchange between the extract air and fresh supply air. The amount of heat / cold that is recovered can be changed by adjusting the bypass air damper's position. If recovery is not necessary, the bypass air damper is opened. This enables some of the supply air to pass by the heat exchanger and move straight into the room.

Top view

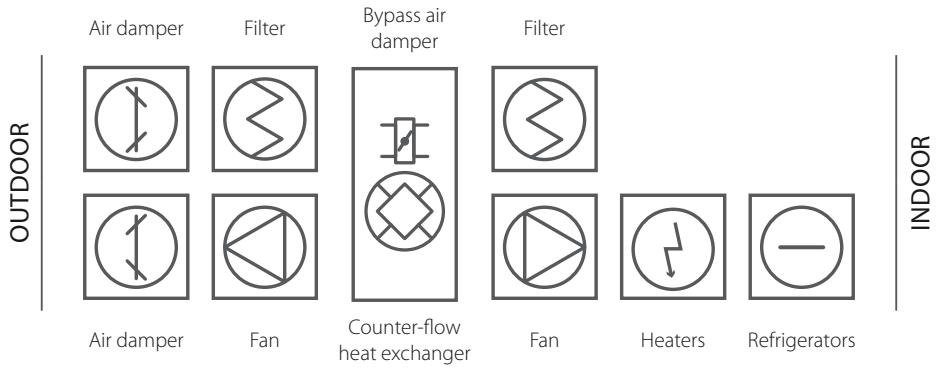

* - Hereinafter, the terms "device," "unit" and "ventilation unit" are used interchangeably.

DESIGNATION KEY

Control panel	0 – none; 1 - 30 - thTune; 2 - 32 - pGNE; 6 - 29 - pGDxTouch 4,3
-	
Control panel	A37 - Kvent medium
-	
Service side	L – left-hand R – right-hand
-	
Cooler control	_ – no control 1 – with a 3-way valve 2 – with a WMG
Cooler insulation	_ – not insulated
Kind of cooler	0 – non-reversible; 1 – reversible, primary
No. of cooling coils	3
Cooler type	_ – no cooler; CW – water CDX – freon
-	
Electric heater power [kW]	. . . – respective power value
Heater insulation	_ – not insulated
Heater control	_ – no control 1 – with a 3-way valve 2 – with a WMG
No. of heating coils	2; 3; 4
Heater type:	_ – no cooler; HW – water HE – electric
-	
Heat exchanger type	0 - polystyrene; 1 - aluminum plates
-	
Rated air flow	700; 1200; 1500; 2500; 3500; 5000
Unit design	P – ceiling
+	
Heat exchanger type	CF – counter-flow
Standard casing size	01; 02; 04; 06
Casing type	AV; AVS
Series	Airvents

Each standard size of Airvents units is designed for a specific air flow range:
Maximum air flow in the unit can be limited upon request, for example, if the fans used are not as powerful, or if the project does not require a greater air flow.
The exact maximum air flow value is specified individually for each unit in its technical data section.

* - The availability of specific elements depends on the configuration of the unit.

UNITS' COMPONENTS AND DESIGN

The ventilation units are designed as monoblock units with additional accessories: heating, cooling, noise reduction, additional filtration. Depending on the order volume and the size of the unit, the accessories can be connected upon manufacturing or delivered separately.

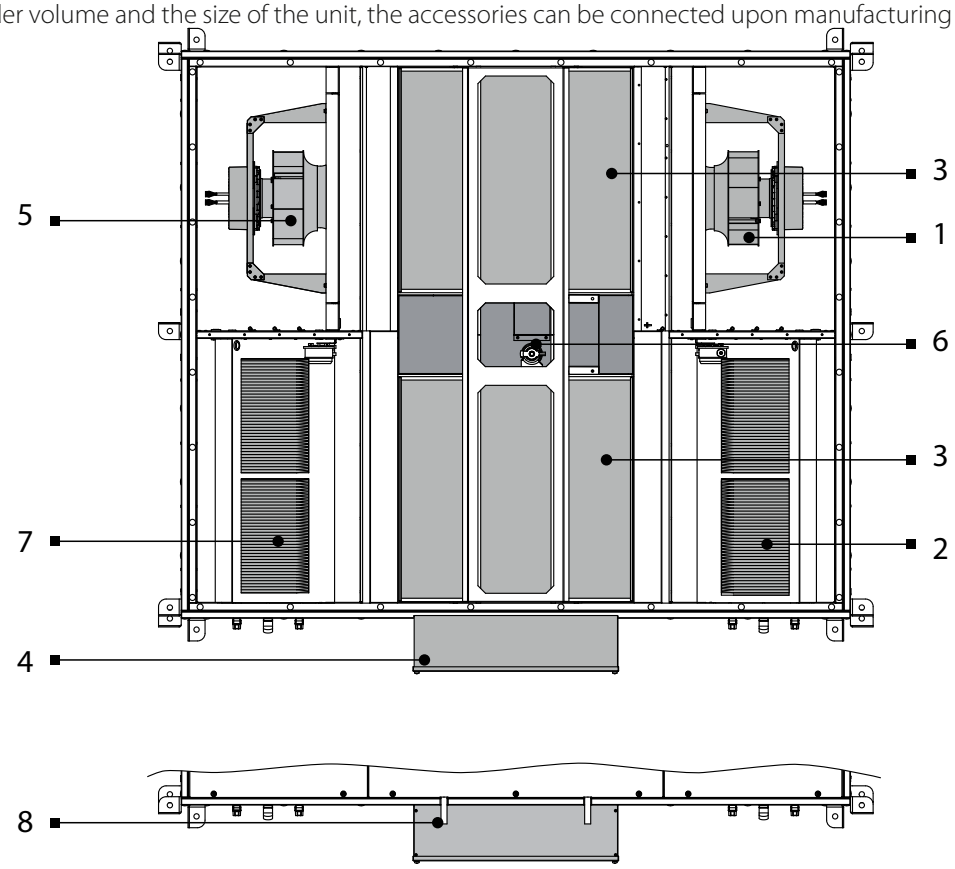

1, 5 – fan unit, 2, 7 – filter, 3 – heat exchanger, 4 – control unit, 6 – bypass damper, 8 — drain pipe

ACCESSORIES

Coolers and heaters

Two cooling options are available with water or freon direct evaporative heat exchangers.
Due to condensation that is formed as the air cools down, a drain pan is installed under the heat exchanger.
If the air velocity in the ventilation unit is too high(>2 m/s), a droplet separator is installed that prevents condentsate from penetrating through other sections of the unit or air ducting system.

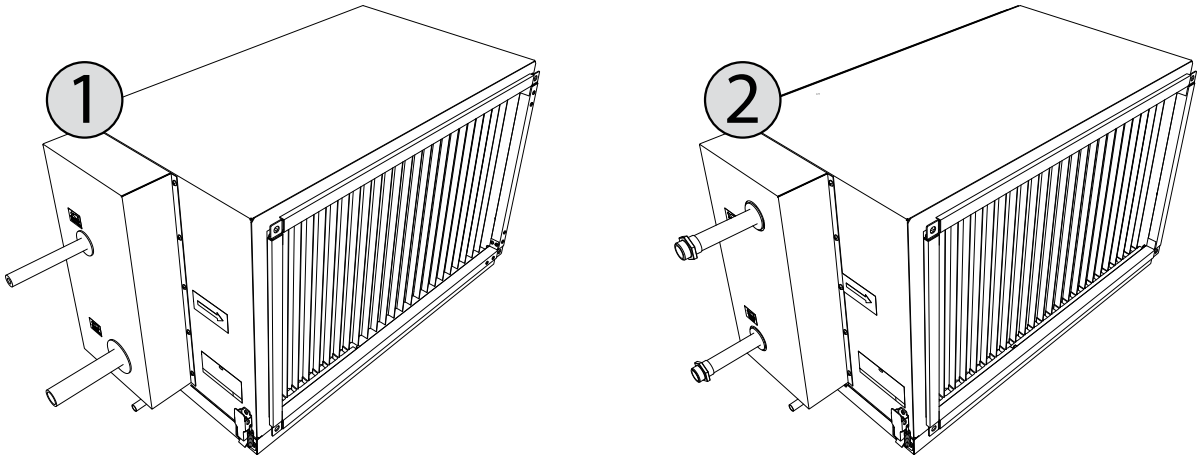

Coolers
1 – freon heat exchanger, 2 – water heat exchanger

Depending on the order, water heaters and electric heaters are available.
A water heater is equipped with a temperature sensor of backflow water and a thermostat, which are used for heat exchanger's frost protection.
To protect against overheating, the electric heater is equipped with two built-in thermal switches: TK60 with an operating temperature of + 60 °C with automatic reset and TK90 with an operating temperature of + 90 °C with manual reset.
After the TK90 triggers, the cause of overheating must be determined before restarting the unit.

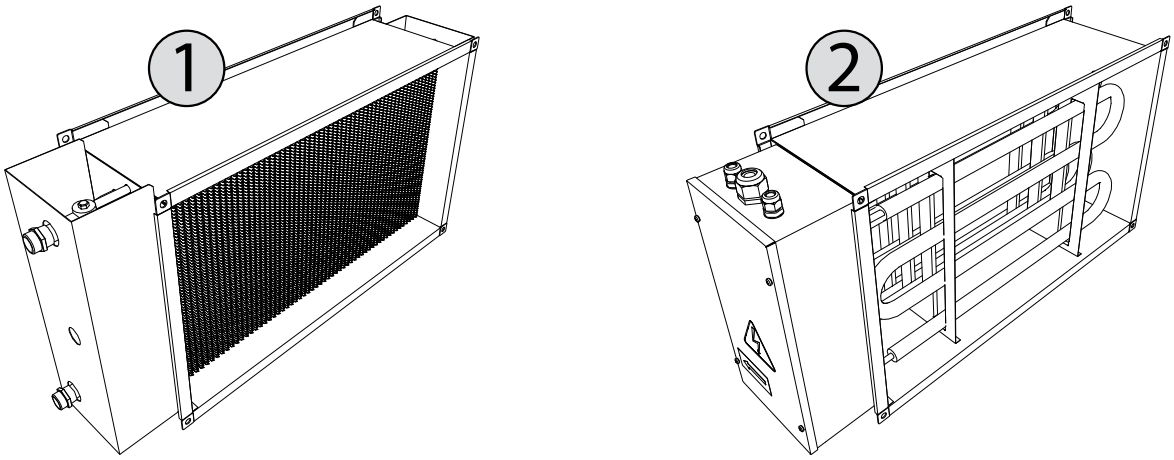

Heaters
1 – water heater, 2 – electric heater

Air dampers

Air dampers are installed outside of the unit and attached with screws.
Air dampers are designed to isolate and protect the unit from collateral air flows and drafts, when the unit is not operating.
Moving plates of the air dampers are opened / closed using an actuator, whose power and torque are selected depending on the size of the air damper.

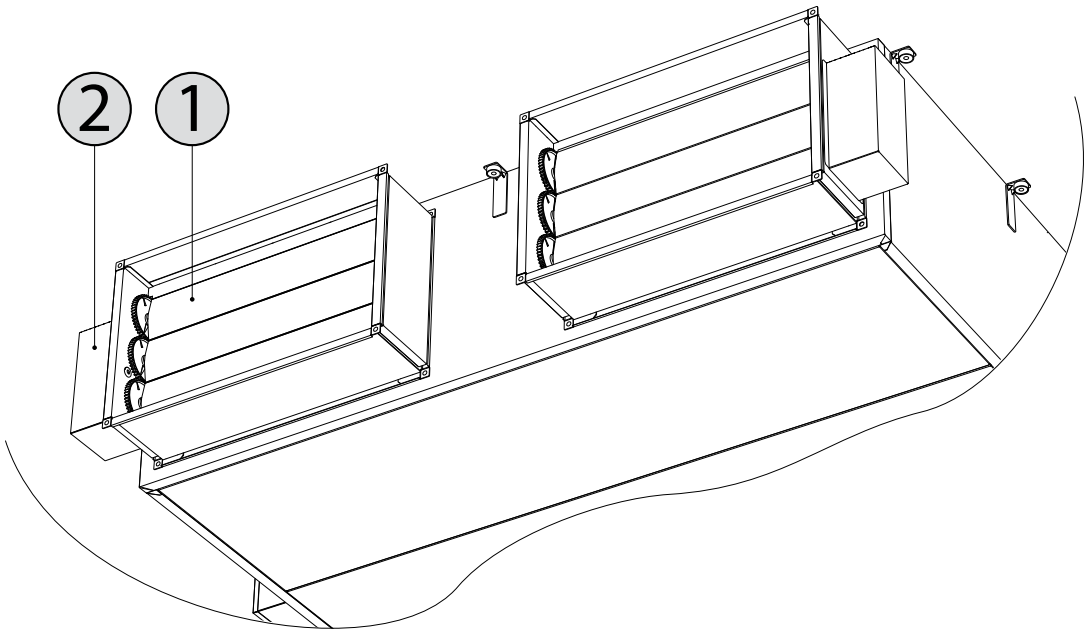

Closing air dampers
1 — movable plates of the damper, 2 — air damper actuatorи

Silencer

The silencer is designed to decrease the volume of sound that is made by the fans of the ventilation unit and air flow.
Inside the silencer, noise absorbing inserts are installed, which can be removed and cleaned during maintenance.

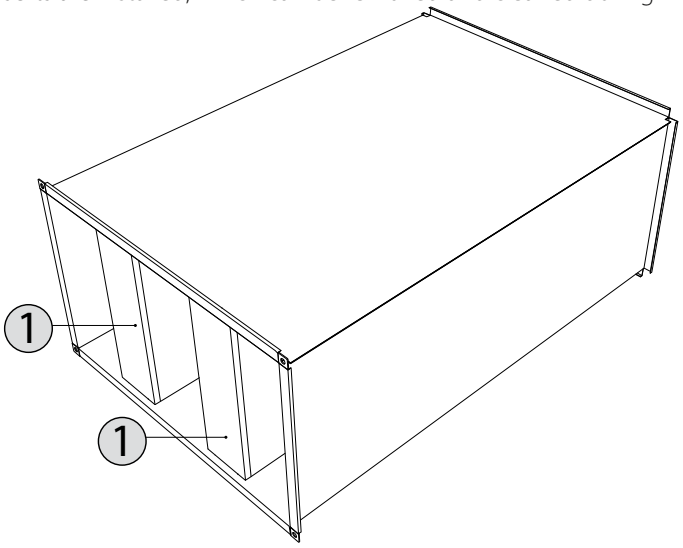

Silencer
1 — removable noise absorbing inserts

Service access sides

The products are available in left- and right-handed versions, i.e., they can have a control unit on the right or left side.

AV(S) CFP 700,1200

Left-handed modification (top view)

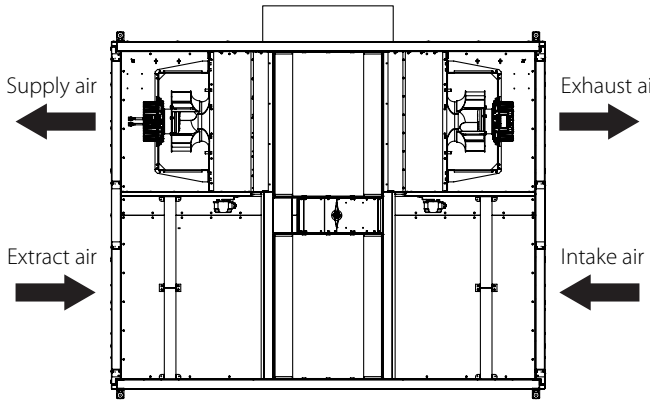

Right-handed modification (top view)

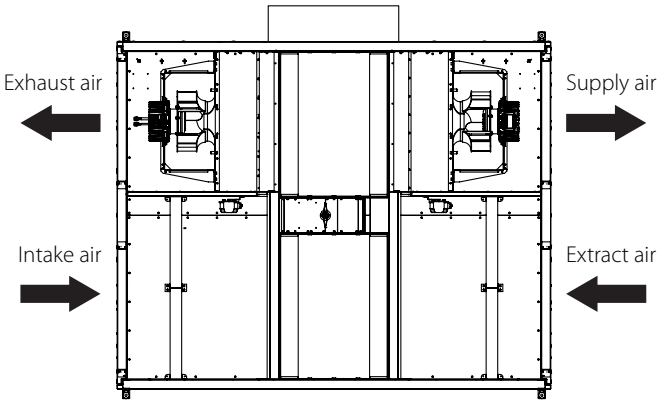

AV(S) CFP 1500, 2500, 3500, 5000

Left-handed modification (top view)

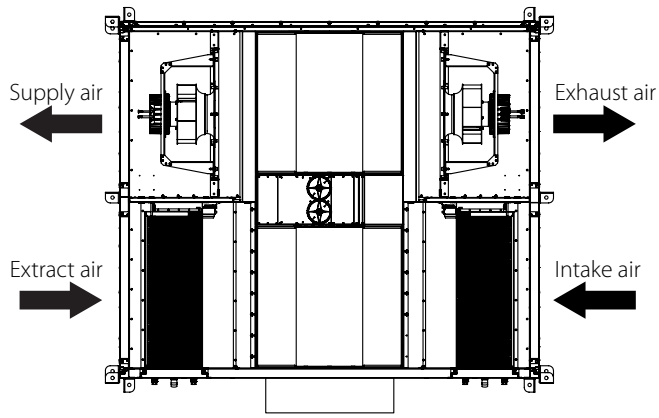

Right-handed modification (top view)

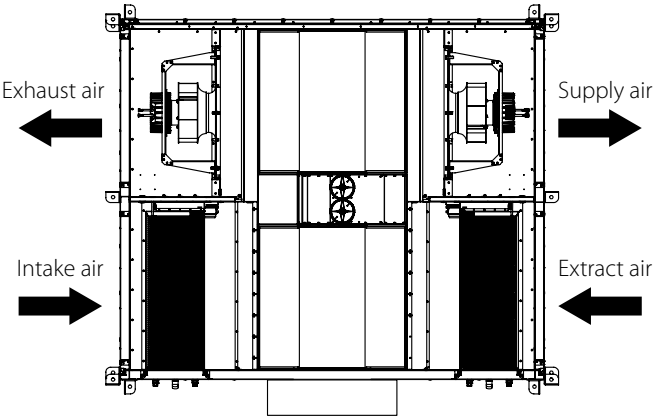

UNIT TRANSPORTATION

Store and transport the unit in the manufacturer's original packaging box only. Adequately secure the units before transporting and set additional protection to prevent potential mechanical damage or precipitation ingress. Hoisting and handling operations can only be performed by qualified professionals authorized to handle hoisting equipment and knows the corresponding principles and security requirements. When using a forklift truck to hoist and transport units, its forks must be long enough to avoid rolling over or damaging the casing of the unit being lifted.



Depending on the standard size and weight of the unit (all the details are specified on labels on the unit), it can be loaded or unloaded using special transporting equipment: a crane, cross-bar or forklift truck.
To protect the sides of the equipment, protective bars are installed on the unit. The length varies depending on the unit size. A cross-bar is also designed for handling operations. Regardless of the equipment used, the side panels must always be protected to prevent damage by the forklift or cables.

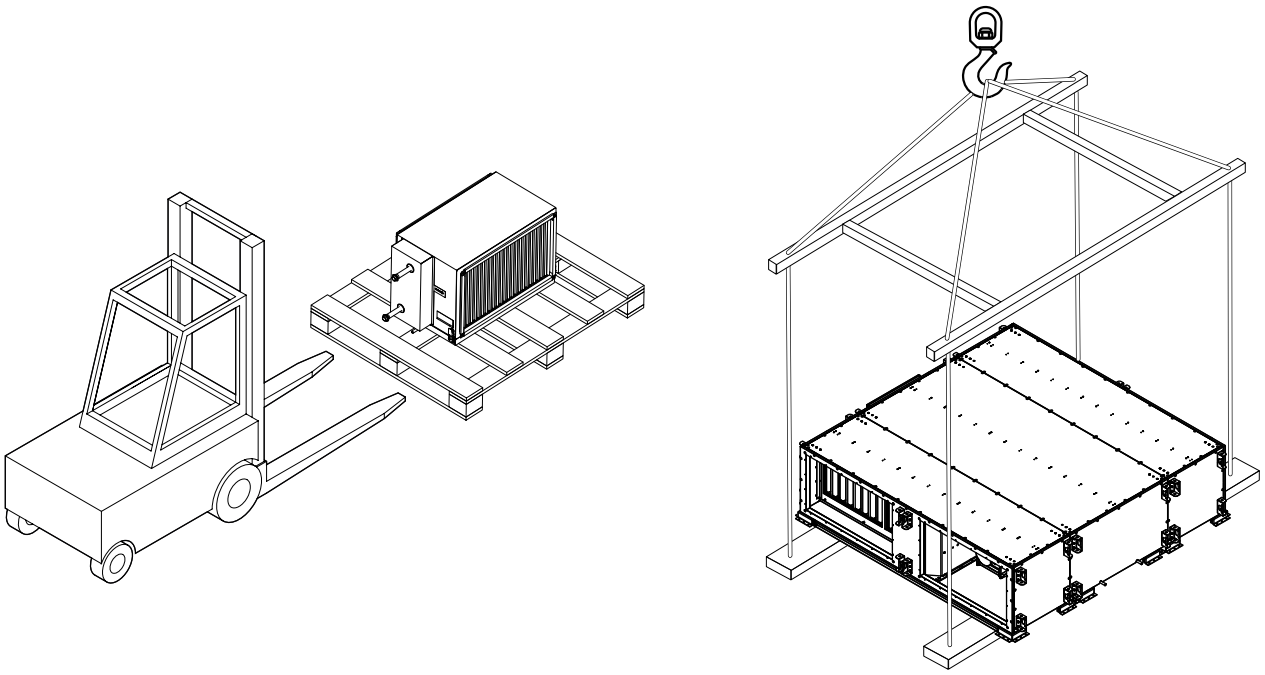

Units are either delivered in individual sections, or in modules (a module consists of several sections).
Modules may require an extra palette to be loaded. In this case, specially designed holes in the palette must be used for unloading.

ATTENTION! A ready-to-use unit cannot be transported without using an additional palette or a similar device to account for its weight, dimensions, subdivision into sections and equal load distribution.

ATTENTION! Before putting the units into operation, be sure to remove the transport brackets.
To dismantle, unscrew the screws (5) and remove the cross members (2). Unscrew the screws (4) and remove the corner elements (3) from the unit casing (1).

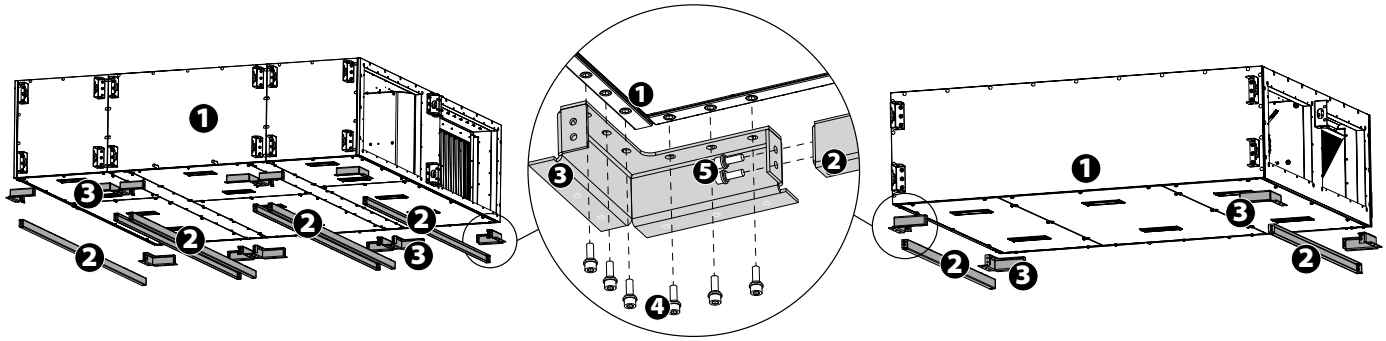

MECHANICAL MOUNTING

Unit installation site requirements

AV(S) CFP ventilation units are designed for ventilation of large and medium-sized commercial and industrial premises (e.g. shops, offices, hotels etc.) where rated temperatures and humidity are maintained.

The units are not designed to transfer airborne particulate matter.

The standard air handling units are installed indoors. The units are rated for operation at the ambient temperatures ranging from -60 °C up to + 60 °C if preheating is used, otherwise the air temperature must be between -25 °C and +60 °C.

- Do not operate AV(S) CFP ventilation units in environments with potential risk of explosive emissions. The units are not designed to ventilate or dry wet rooms (water pools, baths, car washes etc.).
- If a unit is installed in a highly humid room, in cold weather, condensation may occur on the unit's casing walls.

Ceiling-mounted units are typically mounted to the ceiling or other horizontal surfaces with the door facing down. There are special brackets with integrated vibration dampers in their casing for this purpose. The brackets must be screwed to the supporting floor slab structure using threaded rods or anchor bolts. Fasteners for the unit mounting are not included into delivery set and should be ordered separately.

For highly suspended units, additional service platforms should be provided to ensure safe operation during maintenance (e.g. filter changes) or repairs.

Recommended installation scheme

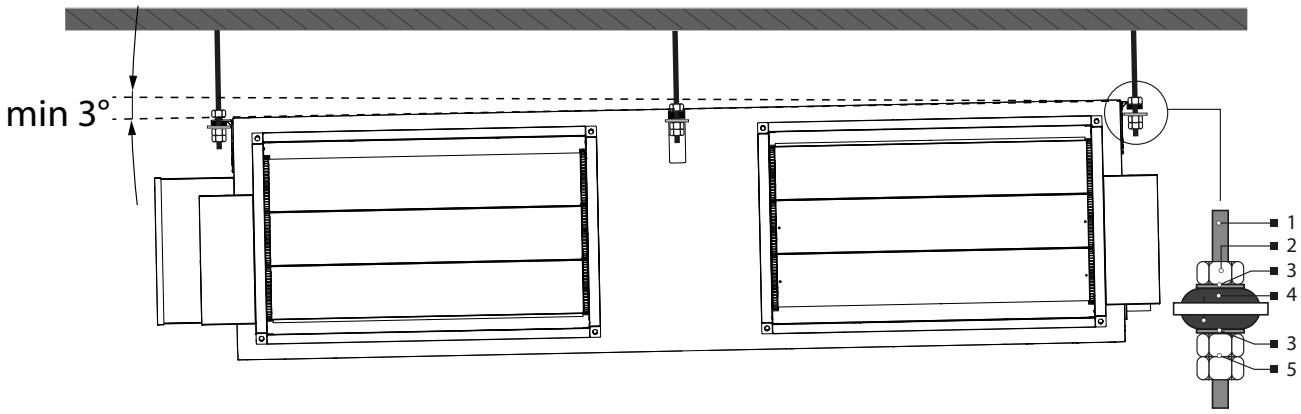

1 – threaded rod; 2 – nut; 3 – washer; 4 – anti-vibration rubber; 5 – nut with a lock nut.

Installation of AV(S) CFP 5000 sections

The AV(S) CFP 5000 unit consists of three parts: the middle section (heat exchanger with automation), and the right and left sections (filter and fan). The sections are connected to each other inside the unit. To access the fasteners, the service panels must be removed, and the turbine assembly should be dismantled for convenience. Retaining brackets and a hardware kit are also included in the delivery set. The process is identical for both the right and left parts. Additionally, the unit suspension brackets are provided with holes that can be used to fasten the units together from the outside (the fastening kit for this option is not provided).

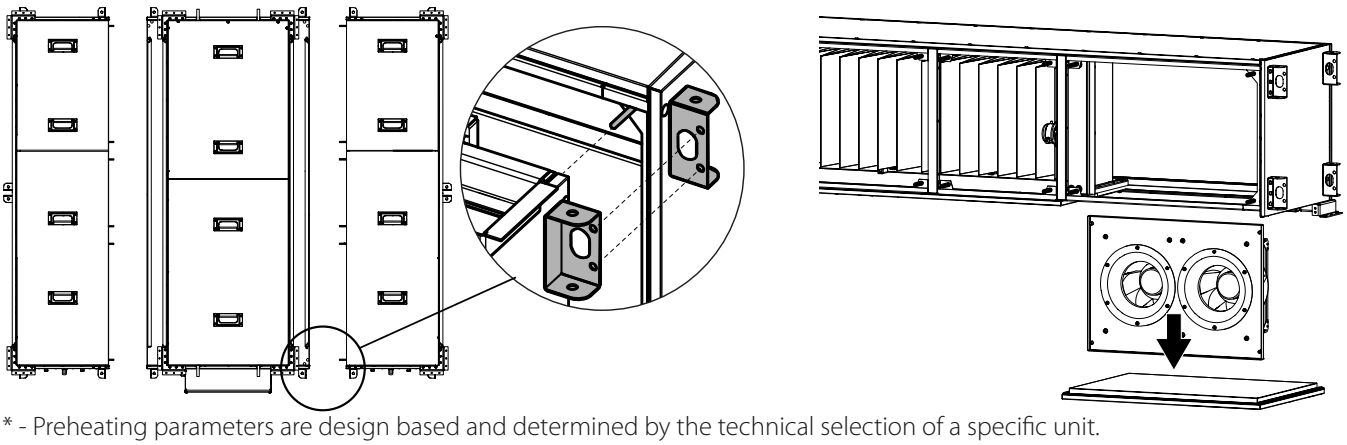

* - Preheating parameters are design based and determined by the technical selection of a specific unit.

SPACE FOR MAINTENANCE

The ventilation units may be mounted indoors.
It is crucial to determine the right place to hang ceiling mounted units. Do not hang such units above stairs or too high, otherwise it will be impossible to reach them without special equipment. If the suspended unit is concealed under a suspended ceiling, the inspection opening (if any) must not be smaller than the unit's dimensions; otherwise, the ceiling must be mounted in a way that enables easy disassembly without damaging the structures. The system is equipped with a control panel located on the side panel (see "Units' components and design"). All external devices and sensors are connected inside the control panel, so it is necessary to leave a space of at least 650 mm between the panel and the building wall. This will allow easier access to the electronics during installation or maintenance.

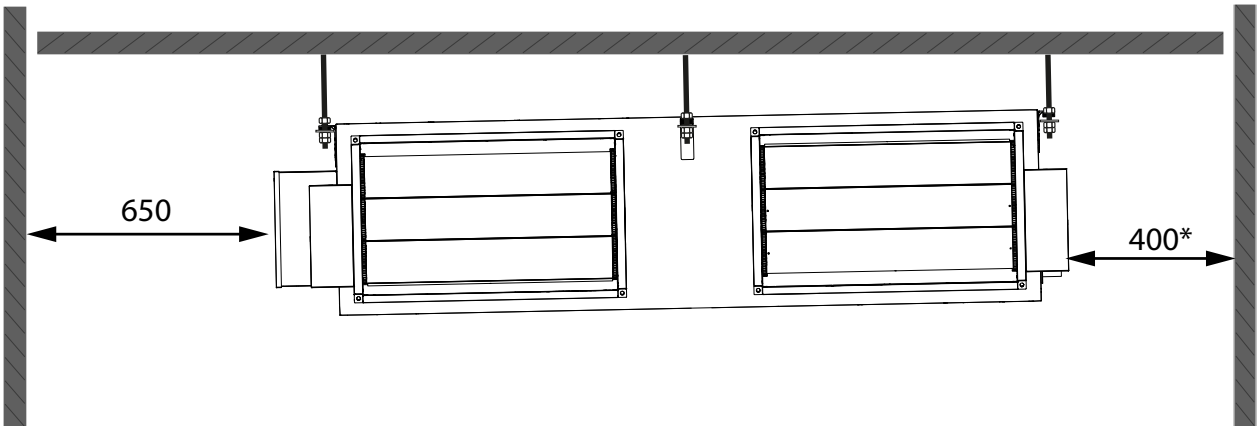

*- if heaters or coolers are present.

DOOR HANDLES AND HOLDERS

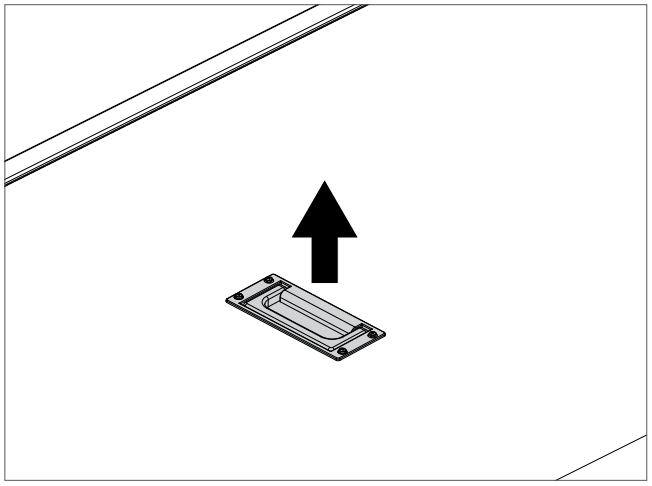

Recessed handles on the service side

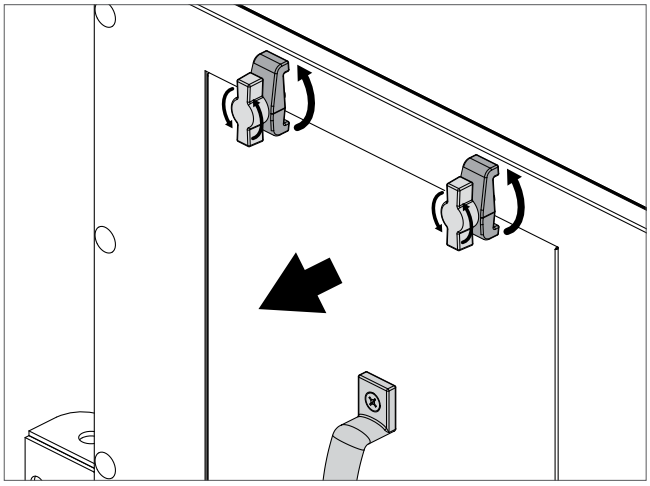

Swivel latches for access doors

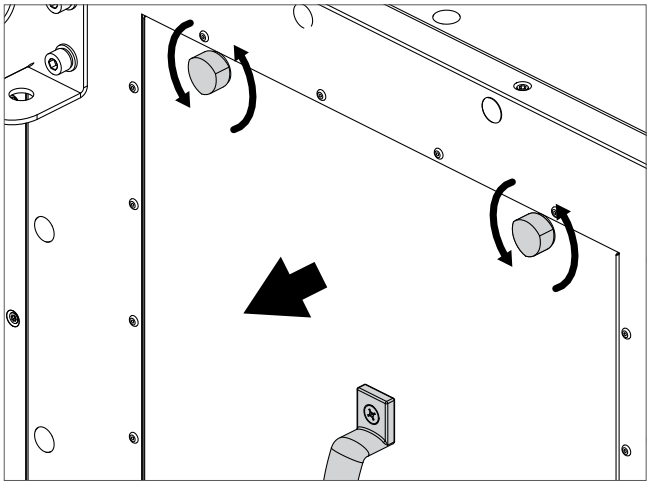

Swivel screws for access doors

CONNECTION OF ACCESSORIES

The ventilation units are designed as monoblock units with additional accessories: heating, cooling, noise reduction, additional filtration. If, for some reason, the unit sections were disassembled while installing in the operational location, the unit's airtightness may not correspond to the data specified in the documents (unless the unit was assembled by the manufacturer's qualified professional). Connect all the cables leading to sections of the unit prior to attaching sections themselves.

- Sealant (included in the delivery set) must be applied to gaps in between the sections
- Do not screw in screws or drill through the casing of the unit (unless intended by design) to avoid damaging cables and tubes inside.

The figure below shows a typical approximate composition of the ventilation system

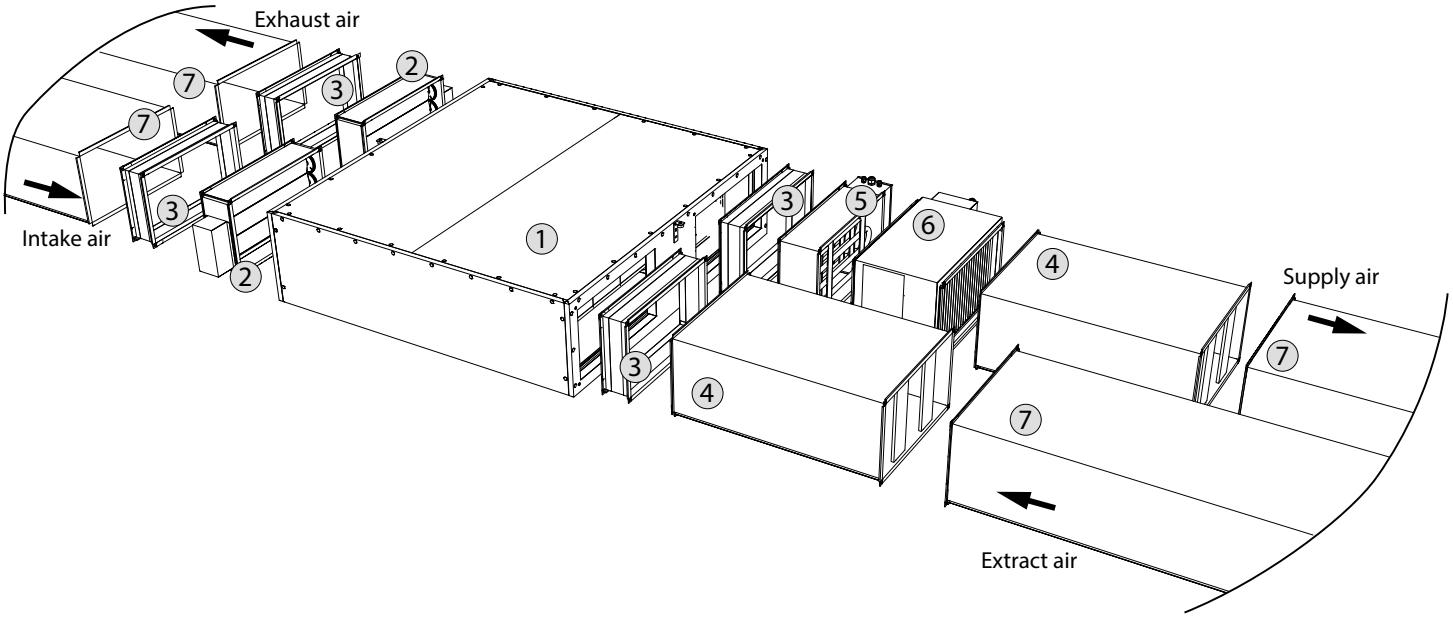

1 – Air handling unit (right-handed design); 2 – Louver valve; 3 – Flexible joint; 4 – Silencer;
5 – Electric heater; 6 – Water cooler; 7 – Rectangular air duct.

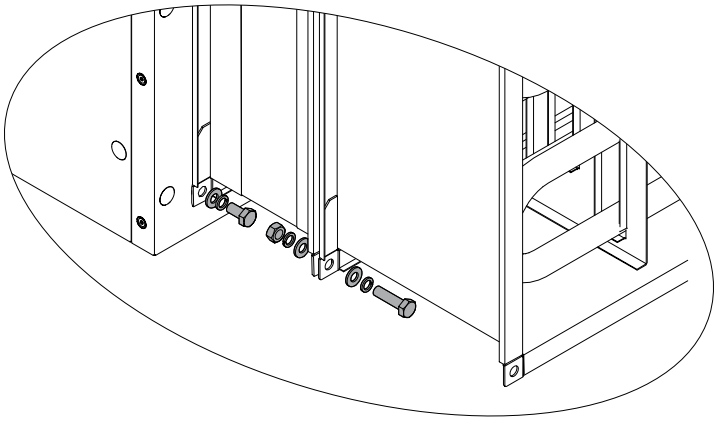

Use fasteners as shown in the figure to connect the optional accessories to the unit and to each other.
For sealing, apply the supplied self-adhesive sealing tape to the surfaces of the flanges to be joined.

CONNECTING VENTILATION HOODS AND INLINE PARTS TO THE UNIT

Elastic ant-vibration connectors, which are designed to prevent vibration transfer from the unit to air ducts, must be used to connect air ducts to the units. Anti-vibration connectors are also designed to eliminate potential installation flaws during the process of connecting air ducts to the unit.
Screws are used to attach connectors to air ducts. The equipment and air ducts that are to be connected must have their own mounting bracket in order to prevent transferring their own weight loads to the unit.

PREHEATER INSTALLATION

Depending on the configuration, AV(S) CFP ventilation units may include different types of preheaters: water and electric heaters.
Usually, heat exchangers are installed in separate sections along with preliminary filters, which are connected on the air intake side of the unit.
In units equipped with a plate heat exchanger, the preheaters are installed on the outdoor air intake side (see "Service access sides") and must be additionally suspended (mounting/hanging elements are not included).
The heat exchanger sections are attached to the ventilation unit and their airtightness is ensured in a similar manner as other sections (see "Connecting accessories").

The figure below shows an example of assembly of the preheater section of a plate heat exchanger unit

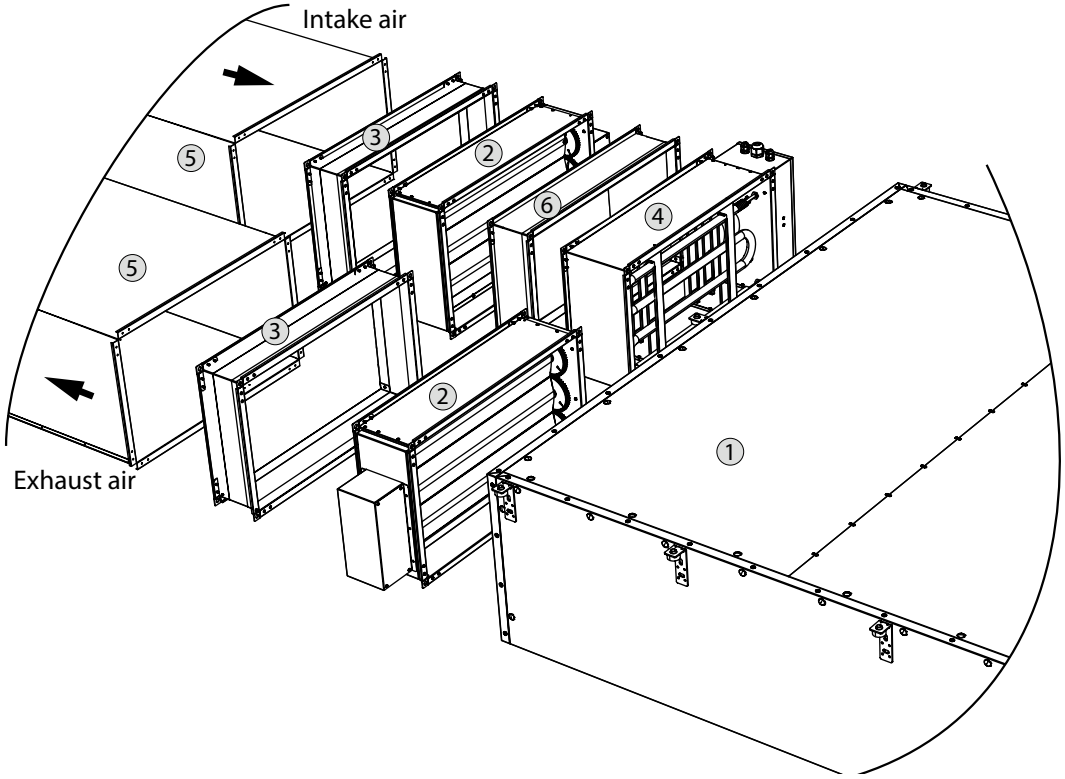

1 – air handling unit; 2 – louver valve; 3 – flexible joint;
4 - electric heater (used as a preheater); 5 – rectangular air duct; 6 – Filter.

CONNECTING THE HEATER AND COOLER SECTIONS

All hydraulic system mounting operations, as well as connection to power mains must be performed by qualified personnel only. The circulation pump must be grounded. Avoid contact between the power cable and the pipes or pump. The flow direction of heat transfer and cooling media must be opposite to that of air flow.

ATTENTION! When connecting a water heater and / or a water or freon cooler, the minimum length of straight piping sections must be 400 mm out of the unit (see the figure below). Otherwise the service panels will be impossible to open!

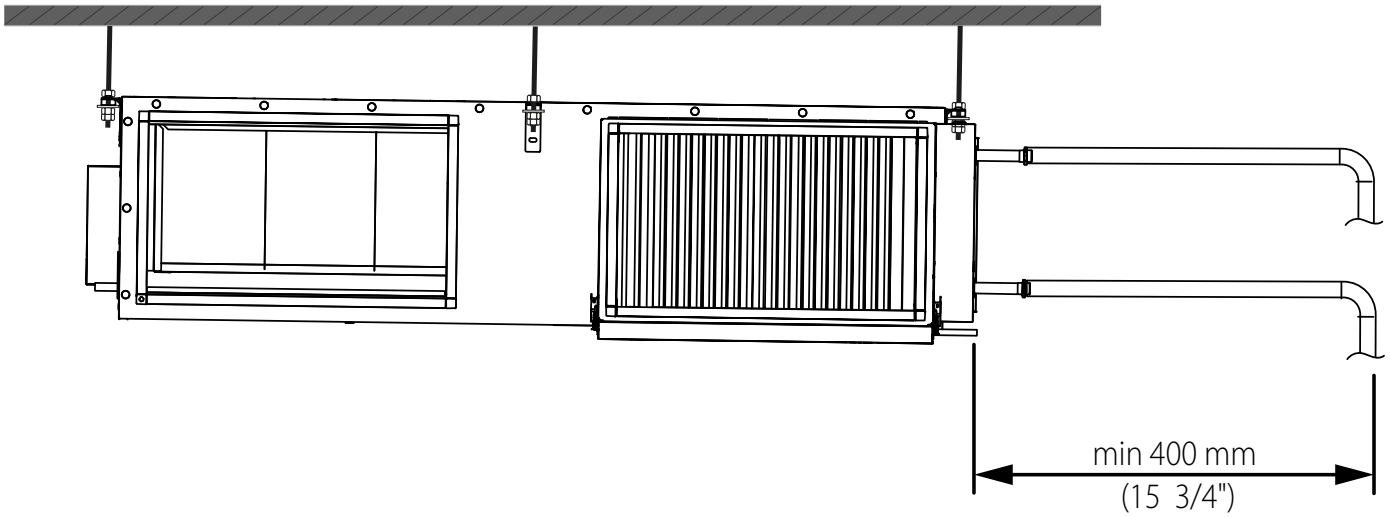

Do not apply mechanical pressure (force) to the pipes while connecting the heater and cooler! The maximum pressure of the heat transfer medium must not exceed 1.5 MPa. It is recommended to use ball valves designed to cut the flow of the heat transfer medium of the water heater (cooler) in case of emergency dismantling without releasing the heat transfer medium from the equipment.

RECOMMENDED CONNECTION DIAGRAM TO MUNICIPAL WATER MAINS

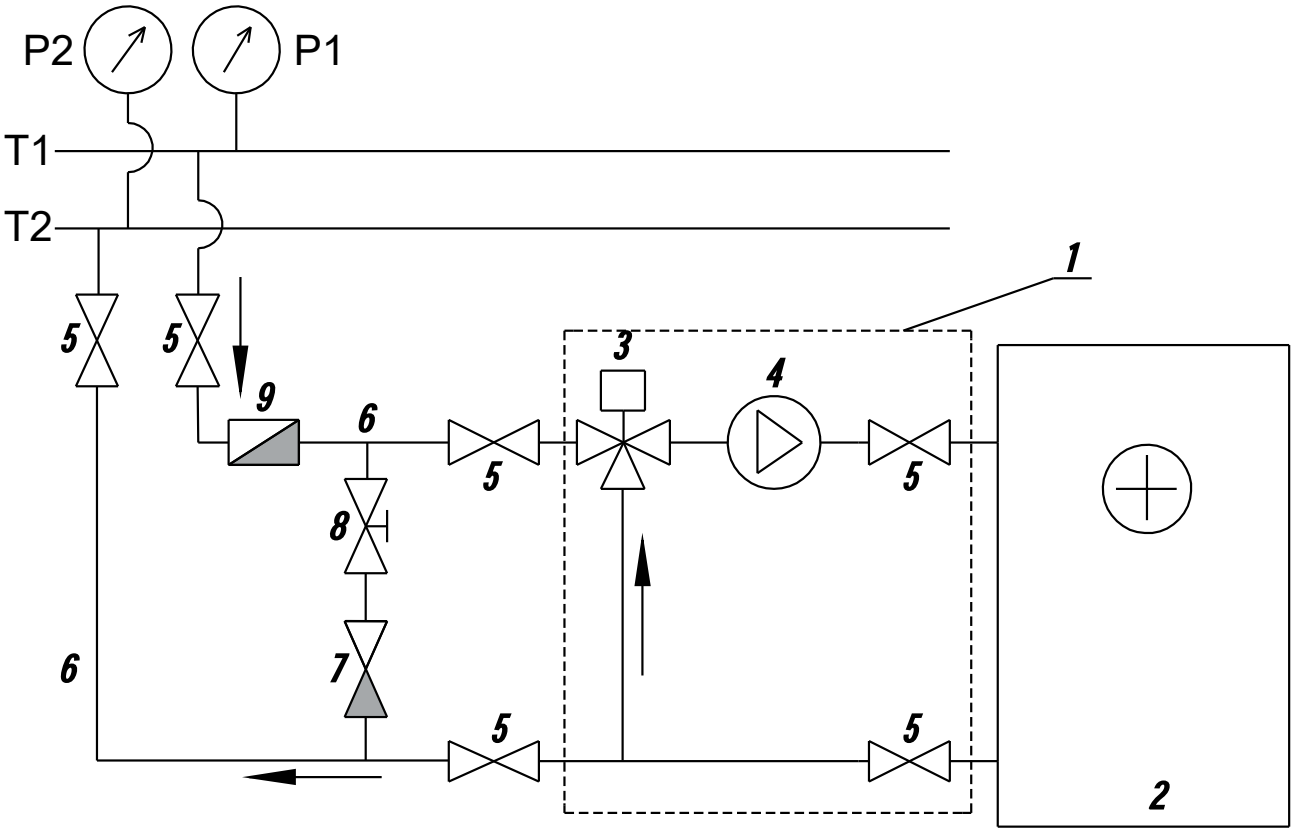

T1 and T2 - supply and return pipelines of the heating / cooling system
P1 and P2 - liquid pressure gauges in the heat distribution system
1 - WMG (mixing unit)
2 - water heater
3 - three-way valve with actuator
4 - circulation pump
5 - shut-off valve
6 - supply and return pipeline between heating system and water heater
7 - check valve
8 - balancing valve
9 - coarse filter

CONNECTING THE DRAIN PIPE

Condensate drainage

The components of the unit that have a condensate drain must be equipped with a trap to ensure that the casing is watertight and that water can be drained out uninterrupted through the drainage spigot on both the suction and discharge sides.

Recommendations for organizing condensate drainage are given below.
All components of the system are not included in the delivery set of the unit and must be purchased separately.
The manufacturer of the unit is not liable for the operability of the condensate drainage system installed at a particular facility.

A trap must be provided at each drainage spigot, separating it from the drainage pipe. Multiple outlets must not be connected to a common trap.

The drainage pipes must have a downward slope of at least 3°, without any tapering or loops, so as not to obstruct the water flow.

Due to the positive or negative air pressure inside the air handling unit, water cannot drain out of the condensate drip tray by itself. Therefore, it is necessary to connect a trap of a suitable height or a trap with a one-way valve to the drainage pipe. The trap must have a

water level that is high enough to counteract the pressure drop between the internal and external space.

The height of the trap is selected based on the static pressure inside the air handling unit (the static pressure is specified in the technical data sheet for the unit).

- only use the positive value for calculations;
- take into account the final pressure drop (filter, etc.).

For a trap wit no one-way valve, the height **H** is determined by the static pressure **p** using the formula:
H [mm] = 25 + **p**, if the pressure is expressed in mm of the water level.
H [mm] = 25 + 0.1**p** if the pressure is expressed in Pa.

The figures below illustrate the geometric features of the traps.

The suction side. Negative pressure ($\mathbf{p} < \mathbf{p}_{atmospheric}$)

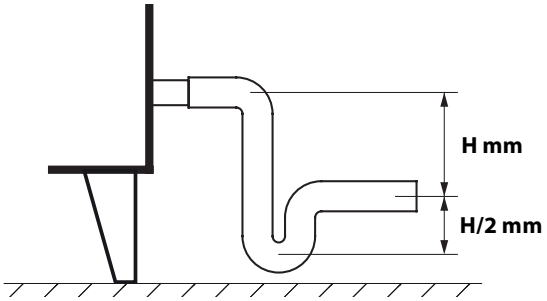

The discharge side. Positive pressure ($\mathbf{p} > \mathbf{p}_{atmospheric}$)

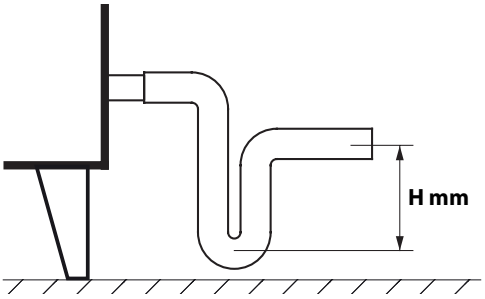

If the trap is equipped with a one-way valve, the height can be reduced, but this depends on the technical data of the trap. It is recommended to choose the height similarly to the trap without a one-way valve.

The figure below illustrates a schematic example of a trap with a one-way valve.

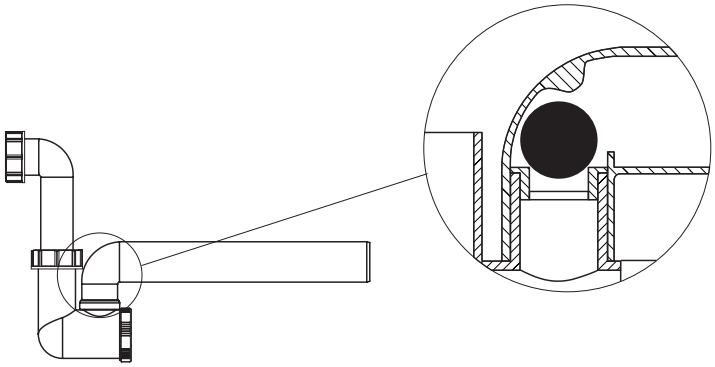

Fill up the U-traps with water before using the system.
The trap must be filled with water at all times as long as the system is operating.

The condensate drainage system should not be directly connected to the common sewage system to avoid polluting the air with bacteria and odors.

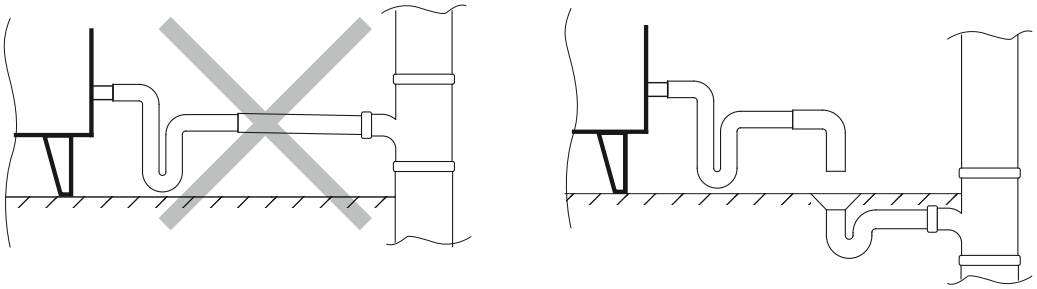

To prevent the water from freezing over in winter, the pipeline laid outdoors or in unheated rooms must be equipped with heat insulation and pre-heating.

CONTROL UNIT

The control unit included in the delivery set is an inseparable part of each ventilation and air conditioning unit, which enables the possibility of smooth control and long and trouble-free operation, preventing operation faults and severe alarms.
This document does not contain any instructions related to installing automation elements, connection, running and operating the system.
Such instructions are given by the manufacturer as part of the auxiliary documentation for the automation system. In all other cases, the automation supplier shall provide any necessary information.
In addition to the automation unit, other elements may be included: air damper actuators, pressure, temperature, humidity, CO_2 and air flow sensors, humidifiers and triac controllers. User manuals for these accessories are not provided with this document.

STARTING SETUP

A trial run must be performed before running and constant operation of the unit. Remember, that only qualified and trained personnel can run the unit. Read the instructions and diagrams provided in the unit-related documentation and do the following steps before the trial run:

- ensure proper installation of the unit;
- ensure proper connection of all ventilation devices to the power mains;
- ensure proper connection of all hydraulic and electric equipment to the corresponding unit sections.

Electric equipment

Ensure proper connection, insulation and grounding of electric equipment according to the wiring diagrams and technical specifications of the delivered units. Check if insulation is intact on the wiring and the units. Installation works must comply with the conditions specified in the unit's technical documents.
Failure to comply voids the manufacturer's warranty. If installation works were performed by the manufacturer's personnel, then the warranty for electric equipment corresponds to the unit's warranty.

Electric heaters

Ensure that the heater is not clogged or damaged. Connect it in accordance with the wiring diagram. The connected heater should not touch any other elements of the unit.

Water heaters

Ensure that the pipelines (supply / back flow) are connected correctly; then check the heater plates. Adjust the frost protection thermostat's parameters one by one (factory settings: +5°C), as well as tight connection of the capillary tube to the heater's surface. The valve controlling the heater's operation must be installed in accordance with the marks on the casing.

Freon (DX), water and glycol coolers.

Check the plates of the cooler, ensure correct connection of the supply and back flow pipelines. Ensure connect installation of the U-trap and droplet separator relative to the air flow direction.

Filters

Ensure proper and tight fixation of filters and their general condition. Detailed filter data should be clarified in their corresponding documentation.

Counter-flow (plate) heat exchanger

Ensure that the heat exchanger is free of clogging and mechanical damage. Ensure that the droplet separator is fixed correctly (if applicable) relative to the air flow direction. Ensure correct installation of the U-trap. If the unit is equipped with a bypass, check the condition of shutters, air dampers and fixation of wiring.

Fan section

The fan section's condition must be checked before running the unit. Ensure absence of any foreign objects in the section, e.g. transport fastening safety elements (yellow) and installation items, which may damage the unit. Unobstructed rotation of the impeller must be ensured

Then, ensure that:

- the wiring complies with the wiring diagram;
- the fan's motor is connected correctly (the power mains voltage must be equal to the one specified on the motor);
- the grounding cable is correctly connected, if the fan is installed on rubber shock absorbers;
- all wires in the fan section are attached correctly.

If all the aforementioned procedures have been carried out, all panels of the unit may be closed.

TRIAL RUN

Only the accordingly trained and qualified personnel is authorized to carry out preparation, as well as the trial run of the unit. Proper functioning of the air dampers must be ensured before running the fans. Correct and safe operation of the unit can only be guaranteed when connected to the rated power mains.
The unit must operate for ca. 30 minutes after starting. Meanwhile, check the amperage of the electric equipment and the unit's air flow. Successful operation is characterized by absence of loud noise, foreign mechanical sounds, as well as vibrations in the unit while operating. Otherwise, troubleshooting must be carried out. If the aforementioned occurs, disconnect the unit from the power mains and check each of its sections again. After turning off the unit and before opening the panels, make sure that the impeller stopped. If it cannot be determined visually, panels should be opened no sooner than 3 minutes after disconnecting the unit from power mains. If no faults were noticed after 30 minutes of operation, the unit may be turned off and checked.

Check the following elements:
- filter fasteners;
- condensate drainage efficiency;
- the motor temperature and the fan group bearings.

After ensuring correct connections, correct operation of shock-vibration dampers must be ensured. Check the frost protection thermostat's operation if weather conditions allow it. It can be done if the supply air temperature remains below the value set on the thermostat. In this case, close the heat transfer medium supply to the heater temporarily at the supply air temperature of +1...2 °C. If the thermostat is turned on, it indicates correct operation.
If the trial run is carried out in the warm season, it should be checked the following cold season as soon as possible.

MAINTENANCE

Air handling units are rated for continuous operation. Operation of the unit requires regular inspection, dry cleaning of internal components, checking and replacement of air filters in case of clogging. After the first 3-6 months of operation, a service technician should visit the unit for scheduled maintenance. Subsequent maintenance should be performed at least once every 6-12 months. The frequency of maintenance is determined by the service technician depending on the operating conditions of the unit. Dusty internal parts of the unit, especially the electric heater, can lead to unpleasant smell over time. This does not constitute a malfunction. To eliminate the odor, the unit must be cleaned.

Filter replacement and cleaning are not subject to manufacturer's warranty service.

The main technical data, which are necessary for the regular maintenance, are specified in the technical data sheet, which is delivered with each device. It contains the layout and dimensions of the core elements (filters, heat exchangers, fans, electric motors).

Filters

Air conditioning units are equipped with cassette filters.Additionally, an inline bag filter of a higher filtration class can be installed.

When replacing filters, it is important that new filters of identical filtration class are installed.

If the filter pressure exceeds the rated value, it must be replaced.

Clogged filters lead to lower air flow in the units and, eventually, to filter deformation or even fan damage. Disconnect the unit from power mains before replacing the filters.

Replacement frequency of the primary filters is mostly dependent on air pollution levels.

Correct use of the primary filters also extends the service life of the secondary ones.

Fans

Even when regular filter maintenance is performed, dust deposits may accumulate in the fans, which leads to reduced unit performance and a decrease in supply air delivery to the room. To clean the fans, use a soft cloth or brush. Do not use water, aggressive solvents, sharp objects, etc., to avoid damaging the impeller.

Access to filters and fans

Open the service panels 1 or doors 2 to access the filters. Remove the filter elements. Servicing of the fans is carried out through the bottom service panels 1.

AV(S) CFP 700, 1200

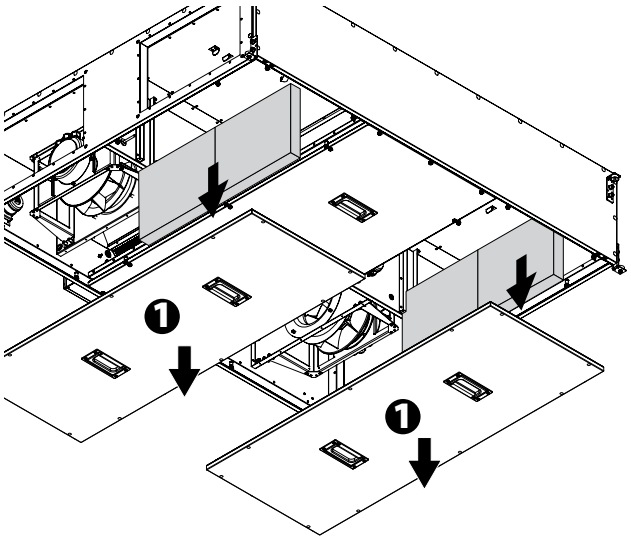

AV(S) CFP 1500, 2500, 3500, 5000

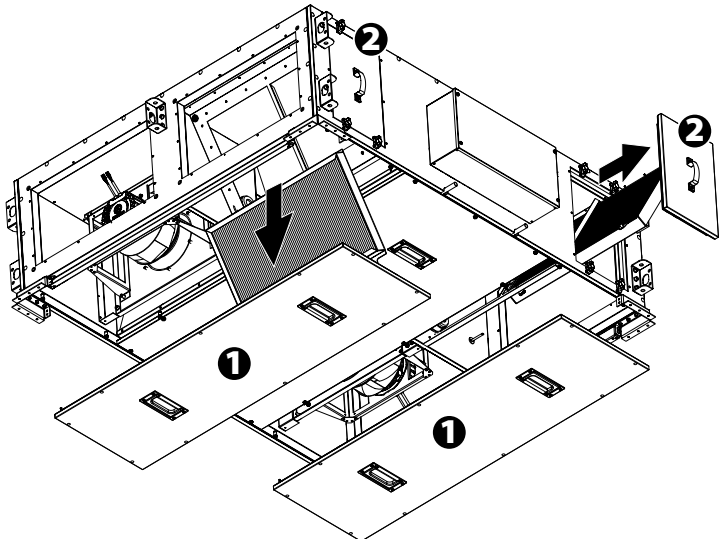

Electric terminals

Electric terminals of all electric nodes of the unit requires regular check-up and tightening to avoid contact burns and equipment malfunction.

Water heater

The water heater is by default equipped with a thermostat for frost protection. When stopping the heat transferring medium supply, operation break (downtime), outdoor air temperature drop lower than + 4 °C, the heat transferring medium must be removed from the heater (unless the heat transferring medium is a glycol substance).

If the heater surface is clogged, the heater capacity decreases. The cleanness of heater plates needs to be monitored. If the heater plates are dusty, it can also increase its air resistance.

Air heaters can be cleaned with a vacuum cleaner from the supply air side blowing it with a flow of air, or washing it with a mixture of warm water and non-aggressive detergents that do not cause corrosion of aluminum plates.

Electric heater
The electric heater consists of open coils, on which dust can accumulate during downtime. If turned on, heavy dust can cause fire or the odor of burning dust to occur. The technical condition, wiring, and cleanness of the heaters must be checked regularly. Dry cleaning only.
Water cooler
Cooler maintenance procedures are identical to those of heater maintenance. It is necessary to ensure that the cooler and droplet separator are clean, and the condensate drainage spigot is unobstructed. If the cooling tubes are dirty (clogged), wash them with a mixture of warm water and a non-aggressive detergent.
Freon cooler
Operational and maintenance conditions for freon coolers are identical to those of the water heater and cooler. Before washing the freon cooler with warm water, disconnect the unit from the power mains. Otherwise, an uncontrolled freon pressure increase and cooling equipment damage can occur.
Counter-flow heat exchanger
Heat exchanger maintenance includes checking the cleanness of plates and its technical condition. The counter-flow heat exchanger must be cleaned with a vacuum cleaner by blowing air flow on it, or washing air ducts with a mixture of water and a non-aggressive detergent that does not cause aluminum corrosion.
Check the condition of the droplet separator (if available), condensate drain pan and the condensate drainage system. If the heat exchanger is equipped with a bypass and air damper, visually check the condition of the bypass actuator and ensure unobstructed air damper lamina movement.

Access to heat exchanger

AV(S) CFP 700, 1200

- Unscrew the screws on the service panel and remove the panel along with the tray attached to it.
- Unscrew the screws holding the heat recovery unit in place and remove it.

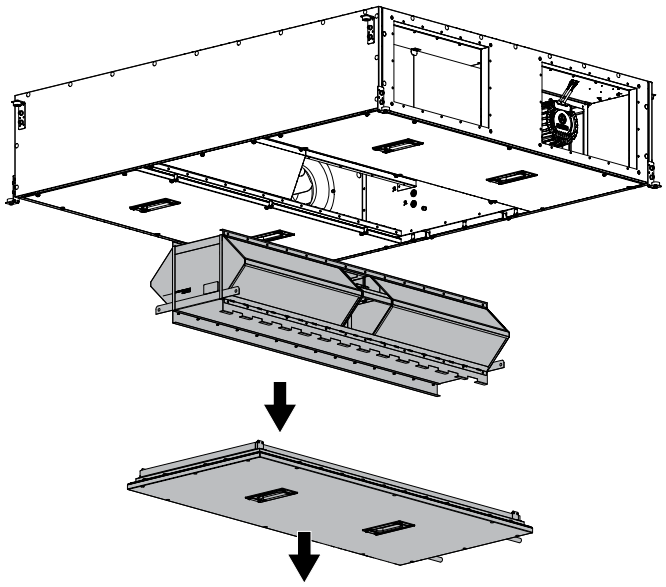

AV(S) CFP 1500, 2500, 3500, 5000

- Unscrew the screws on the service panel and remove it.
- Unscrew the screws holding the pan in place and remove it at a slight angle so that the hoses can be easily removed from the openings.
- Unscrew the screws holding the heat exchanger unit in place and remove it.

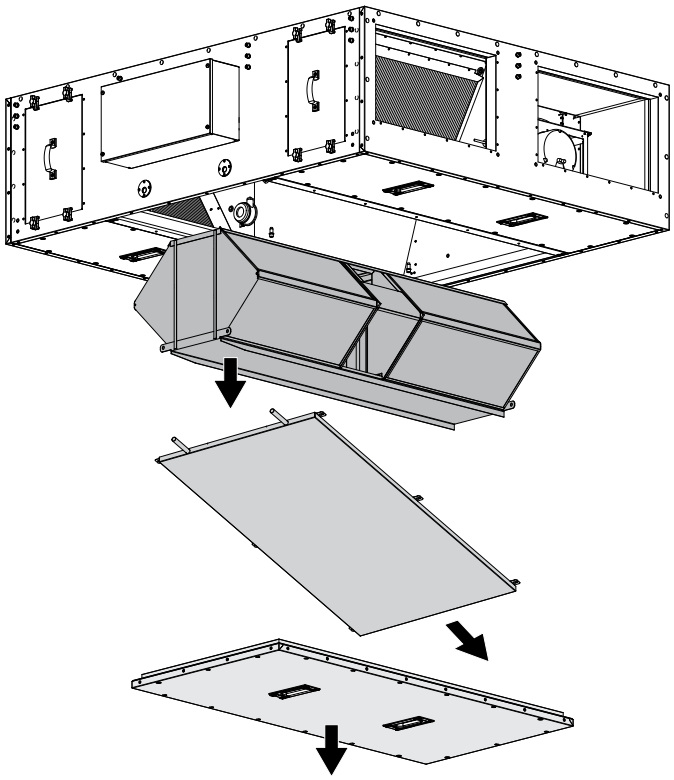

Air valve and damper
Air dampers must be checked regularly. Proper function of air dampers can be obstructed by dust and other pollutants, which can accumulate on the lamina and cogs of the dampers.
If dirt is detected, remove it with compressed air. If the aforementioned troubleshooting is ineffective, clean the damper with a strong stream of a mixture of water and a non-aggressive detergent, which does not cause corrosion on aluminum surface.

PROCEDURES FOR TECHNICAL MAINTENANCE OF VENTILATION EQUIPMENT

	Component name	once per week	once per month	once in 6 months	once per year
1.	**Supply air filter*:**				
	- visual inspection	-	+	-	-
	- dusting, blowing compressed air	-	(!)	+	-
	- replacement	-	-	-	+
2.	**Extract air filter*:**				
	- visual inspection	-	+	-	-
	- dusting, blowing compressed air	-	(!)	+	-
	- replacement	-	-	-	+
3.	**Automation panel:**				
	- checking communication and power cords for integrity	-	+	-	-
	- checking terminal connections	-	+	-	-
	- checking fail-start protection equipment	-	+	-	-
	- checking controller operation, analyzing error log	+	-	-	-
	- analyzing temperature sensor values	+	-	-	-
	- checking temperature sensor values	+	-	-	-
	- checking the operation of the protective nodes	-	+	-	-
4.	**Water heater:**				
	- visual condition check-up	-	-	+	-
	- cleaning and washing	-	-	-	+
	- checking the operation of the three-way valve and circulating pump (if there is heat transferring medium in the system)	-	-	+	-
5.	**Electric heater:**				
	- visual condition check-up	-	+	-	-
	- cleaning	-	-	+	-
	- checking the heating elements	-	-	+	-
6.	**Coolers**				
	- visual condition check-up	-	+	-	-
	- checking the condensate drain pan	-	+	-	-
	- checking the drainage system and U-trap	-	+	-	-
	- cleaning (including the droplet separator)	-	-	-	+
7.	**Counter-flow heat exchanger:**				
	- visual inspection	-	+	-	-
	- checking the condensate drain pan	-	+	-	-
	- checking the drainage system and U-trap	-	+	-	-
	- checking the bypass air damper and its actuator	-	+	-	-
	- cleaning the heat exchanger	-	-	-	+
8.	**Shutter valve (extract / supply):**				
	- checking air shutters for smooth operation	-	-	+	-
	- ensuring actuator triggering and checking the wiring condition	-	-	+	-
	- damper cleaning	-	-	+	-

PROCEDURES FOR TECHNICAL MAINTENANCE OF VENTILATION EQUIPMENT

	Component name	once per week	once per month	once in 6 months	once per year
9.	**Supply and extract fans:**				
	- visual inspection and check-up of the electric motors and impellers	-	+	-	-
	- checking the motor fastening	-	+	-	-
	- check-up of the terminal connections in the motor terminal box	-	-	+	-
	- test run of the motor with and without load	-	-	+	-
	- checking of the impeller fixation	-	+	-	-
	- checking of the indirect motor heating temperature under the rated operation conditions	-	-	+	-
	- current checking and measuring for each phase	-	-	-	+
	- dusting the impeller and motor	-	-	+	+

(!) — more intensive contamination requires more frequent applications.
*— filter cleaning and replacement frequency may deviate from the recommended schedule depending on the region and air pollution degree.

ALARMS

	Alarm	Alarm source	Possible troubles
1.	Fire signalling	External signal from the fire alarm system. The inputs of the external terminals are closed and the alarm signal is generated.	Check the inlet circuits.
2.	Supply fan	Differential pressure switch on the fan (if the system is equipped with an electric heater)	Check the fan operation. Check the pressostat operation. Check the thermostat capillary tube mounting.
3.	Temperature sensor	Malfunction of any temperature sensor	Check the current temperature readings in the controller menu, see "Current status." If the controller reads the temperature -40 °C, it indicates a short circuit in the corresponding sensor circuit. If the controller reads the temperature +150 °C, it indicates a circuit breakdown.
4.	Heat exchanger freezing	This alarm is generated if the temperature falls down below the set point within a set time period.	Check the parameters of the control low for the heat exchanger.
			Check the bypass air damper functionality
			Check the exhaust air temperature for functionality.
5.	Heater freezing	Triggering of the frost protection thermostat of the heater. The frost protection function remains active in the summer mode.	Set the thermostat tripping temperature (8 —10 °C). Check the thermostat control circuit. Check the settings of the operating contact for compliance.
6.	Low water temperature	Low heat medium temperature at the end of the heating cycle.	Check the heat medium. Check the pump. Check the bypass air damper Check heat medium flow.
7.	Low return heat medium temperature	Low heat medium temperature during operation.	Check the heat medium temperature. Check operation of the circulation pump. Check the bypass air damper Check heat medium flow and make sure the hydraulic system is not clogged.
8.	Circulation pump	No pump operation control.	Check the pump functionality. Check functionality of the control unit (pressostat, flow rate sensor, etc.). If a control unit is not available, jump the respective inputs.
9.	Supply filter	Supply filter clogging.	Check for clogging. Check the clogging control device (pressostat).
10.	Extract filter	Extract filter clogging.	Check for clogging. Check the clogging control device (pressostat).
11.	Overheating of the electric heater.	The electric heater overheating thermostat has been triggered.	Check the supply air damper for opening, check the supply filter for clogging, check functionality of the actuating device (relay).
12.	Low supply air temperature	Low supply air temperature within 10 minutes (scheduled) is interpreted as underheating.	Check the heating element and control circuit condition. Make sure that the environmental conditions of the installation place match the stated conditions.

TROUBLESHOOTING

	Problem	Possible source	Troubleshooting
1.	Filter alarm (clogging).	Filter clogging.	Clean the filter using a vacuum cleaner against air flow direction or install a new filter. (!) Do not wash the filter with water or detergents!
		Malfunction of the pressostat or breakdown of the commutation circuit (NC - normally closed contact).	Check the status of the pressostat or check its circuit (NC - normally closed contact).
2.	Low air flow.	Filter clogging, heater or heat exchanger contamination.	Clean the fan, the heater and the heat exchanger.
		Fan malfunction.	Check power supply to the fan. Check the control system for errors.
		One or two both dampers are closed.	Check the air damper for smooth opening. Check connection to power supply and available control signal on the damper actuator.
		Wrong rotation direction of the fan.	Check the three-phase motor for correct phase sequence. Check the capacitor capacity and its status for the single-phase motor. Check the software settings and rotation direction. **(!) The rotation direction is shown on the impeller of the ventilation unit or in the corresponding user manual.**
3.	Water dripping in the unit.	Drain line clogging.	Clean the pipes.
		No U-trap.	Install the U-trap.
		Wrong unit / drain line mounting angle.	Check the installation angle of the air handling unit/drain line for consistence with the data stated in the technical documentation. Ensure compliance if required.
4.	No heating (applicable for the air handling units with an integrated heater)	No power supply to the electric heating elements.	Check power supply to the heater section. Check resistance of each heating element and check them for integrity. In case of any breach on the circuit of the heating element replace it.
		Tripping of the thermal switch TK 90 °C.	Press the "Reset" button on the thermal switch TK90 for manual reset. (!) Troubleshoot the tripping source for TK90.
		No contact on the electric heating elements.	Press the connection lugs of the heating elements.
		Electric heater element broken (broken conductor).	Replace the electric heating element.
		Solid-state relay broken.	Check the condition of the solid-state relay using a volt-ohm meter. Normally, the relay does not act as a conductor and is closed.
5.	Water heater/ cooler has no or insufficient heating/ cooling or cooling capacity.	No heat medium.	Check availability of the heat medium in the hydraulic system, its temperature and pressure.
		Air locks in the hydraulic system.	Deaerate the system.
		No heat medium circulation.	Check power supply to the circulation pump.
			Check the pump rotor for rotation.
		Malfunction or closing of the mixing unit.	Check power supply to the mixing unit actuator.
			Check the connection of the actuator to the actuating device.
		The bypass damper is open.	Check the bypass damper actuator for jamming. Make sure it is properly connected to power supply. Ensure that the bypass damper opening procedure matches the control system command.

TROUBLESHOOTING

	Problem	Possible source	Troubleshooting
6.	Abnormal noise generated by the unit.	Direct connection of the air duct to the casing without anti-vibration connector.	Make sure the air duct does not touch the unit.
		Run-out of the motor bearing service life.	Check rotation of the rotor (impeller) when idle. Noise and skirr may indicate the run-out of the bearing service life. Measure the phase current and make sure it is consistent with the data specified in the manual
		Wrong rotation direction of the fan.	Check the software settings and rotation direction. **(!) The rotation direction is shown on the impeller of the ventilation unit or in the corresponding user manual.**
7.	Malfunction of one or both motors.	No power supply to the electric motors.	Check the voltage.
		Motor winding breakdown or turn-to-turn short circuit of the motor winding.	Check resistance of each motor winding using a volt-ohm meter.
		No control signal for EC motors.	Make sure the signal is available for specified status of the control system parameters. Check the control system for errors.
8.	Generation of condensate in inappropriate places in the unit.	Air motion inside of the unit during standstill caused by air draughts because of open or absent dampers.	Check functionality of the supply and exhaust air dampers.
		Internal air leakages as a result of severe clogging of one or two filters, which may lead to internal air leaks.	Clean the filter using a vacuum cleaner against air flow direction or install a new filter. (!) Do not wash the filter with water or detergents!
		Unit misuse.	Check the transported air parameters (humidity + temperature) and the environmental parameters.

FINAL MEASUREMENT OF OPERATING PARAMETERS

The technical maintenance of the unit includes routine measurements of the following parameters:

- Correct temperature and humidity of the processed air both upstream and downstream of the air handling unit.
- The operating parameters of the components in the connected heating and cooling equipment.
- Proper operation of the electrical equipment (power consumption measurements).
- Proper operation of the fan groups specific to maintaining the air flow and unit operation parameters.

All the work specific to the routine control measurements and technical maintenance operations must be confirmed with the appropriate documents.

STORAGE AND TRANSPORTATION REGULATIONS

- Store the unit in the manufacturer's original packaging box in a dry closed ventilated premise with temperature range from -20 ˚C to +30 ˚C and relative humidity up to 70 %.
- Storage environment must not contain aggressive vapors and chemical mixtures provoking corrosion, insulation, and sealing deformation.
- Use suitable hoist machinery for handling and storage operations to prevent possible damage to the unit.
- Follow the handling requirements applicable for the particular type of cargo.
- The unit can be carried in the original packaging by any mode of transport provided proper protection against precipitation and mechanical damage. The unit must be transported only in the working position.
- Avoid sharp blows, scratches, or rough handling during loading and unloading.
- Prior to the initial power-up after transportation at low temperatures, allow the unit to warm up at operating temperature for at least 3-4 hours.

MANUFACTURER'S WARRANTY

The product is in compliance with EU norms and standards on low voltage guidelines and electromagnetic compatibility. We hereby declare that the product complies with the provisions of Electromagnetic Compatibility (EMC) Directive 2014/30/EU of the European Parliament and of the Council, Low Voltage Directive (LVD) 2014/35/EU of the European Parliament and of the Council and CE-marking Council Directive 93/68/EEC. This certificate is issued following test carried out on samples of the product referred to above.
The manufacturer hereby warrants normal operation of the unit for 24 months after the sale date provided the user's observance of the transportation, storage, installation, and operation regulations. Should any malfunctions occur in the course of the unit operation through the Manufacturer's fault during the guaranteed period of operation, the user is entitled to get all the faults eliminated by the manufacturer by means of warranty repair at the factory free of charge. The warranty repair includes work specific to elimination of faults in the unit operation to ensure its intended use by the user within the guaranteed period of operation. The faults are eliminated by means of replacement or repair of the unit components or a specific part of such unit component.

The warranty repair does not include:
- routine technical maintenance
- unit installation/dismantling
- unit setup

To benefit from warranty repair, the user must provide the unit, the user's manual with the purchase date stamp, and the payment paperwork certifying the purchase. The unit model must comply with the one stated in the user's manual. Contact the Seller for warranty service.

The manufacturer's warranty does not apply to the following cases:
- User's failure to submit the unit with the entire delivery package as stated in the user's manual including submission with missing component parts previously dismounted by the user.
- Mismatch of the unit model and the brand name with the information stated on the unit packaging and in the user's manual.
- User's failure to ensure timely technical maintenance of the unit.
- Damage to the unit casing and internal components caused by the user.
- Redesign or engineering changes to the unit.
- Replacement and use of any assemblies, parts and components not approved by the manufacturer.
- Unit misuse.
- Violation of the unit installation regulations by the user.
- Violation of the unit control regulations by the user.
- Unit connection to power mains with a voltage different from the one stated in the user's manual.
- Unit breakdown due to voltage surges in power mains.
- Discretionary repair of the unit by the user.
- Unit repair by any persons without the manufacturer's authorization.
- Expiration of the unit warranty period.
- Violation of the unit transportation regulations by the user.
- Violation of the unit storage regulations by the user.
- Wrongful actions against the unit committed by third parties.
- Unit breakdown due to circumstances of insuperable force (fire, flood, earthquake, war, hostilities of any kind, blockades).
- Missing seals if provided by the user's manual.
- Failure to submit the user's manual with the unit purchase date stamp.
- Missing payment paperwork certifying the unit purchase.

FOLLOWING THE REGULATIONS STIPULATED HEREIN WILL ENSURE A LONG AND TROUBLE-FREE OPERATION OF THE UNIT

USER'S WARRANTY CLAIMS SHALL BE SUBJECT TO REVIEW ONLY UPON PRESENTATION OF THE UNIT, THE PAYMENT DOCUMENT AND THE USER'S MANUAL WITH THE PURCHASE DATE STAMP

CERTIFICATE OF ACCEPTANCE

Unit Type	Air handling unit
Model	
Serial Number	
Manufacture Date	
Quality Inspector's Stamp	

SELLER INFORMATION

Seller	
Address	
Phone Number	
E-mail	
Purchase Date	
This is to certify acceptance of the complete unit delivery with the user's manual. The warranty terms are acknowledged and accepted.	
Customer's Signature	

Seller's Stamp

INSTALLATION CERTIFICATE

The _____ unit is installed pursuant to the requirements stated in the present user's manual.		
Company name		
Address		
Phone Number		
Installation Technician's Full Name		
Installation Date:	**Signature:**	
The unit has been installed in accordance with the provisions of all the applicable local and national construction, electrical and technical codes and standards. The unit operates normally as intended by the manufacturer.		
Signature:		

Installation Stamp

WARRANTY CARD

Unit Type	Air handling unit
Model	
Serial Number	
Manufacture Date	
Purchase Date	
Warranty Period	
Seller	

Seller's Stamp



Manufacturer: Ventilation Systems LLC,
Ukraine, Kyiv, 1 M. Kotsyubynskoho Street
Address of production facilities:
Ukraine, Kyiv Region, Fastiv District, Boyarka, 36 Sobornosti Street

V334EN-01