USER'S MANUAL

VUTR 280 V EC
VUTR 280 VE EC



Heat recovery air handling unit

VENTS

CONTENTS

Safety requirements 2
Purpose 4
Delivery set 4
Designation key 4
Technical data 5
Design and operating principle 7
Installation and set-up 8
Connection to power mains 11
Technical maintenance 14
Storage and transportation regulations 16
Manufacturer's warranty 17
Certificate of acceptance 19
Seller information 19
Installation certificate 19
Warranty card 19

This user's manual is a main operating document intended for technical, maintenance, and operating staff.
The manual contains information about purpose, technical details, operating principle, design, and installation of the VUTR 280 V (E) EC unit and all its modifications.
Technical and maintenance staff must have theoretical and practical training in the field of ventilation systems and should be able to work in accordance with workplace safety rules as well as construction norms and standards applicable in the territory of the country.

SAFETY REQUIREMENTS

This unit is not intended for use by persons (including children) with reduced physical, sensory or mental capabilities, or lack of experience and knowledge, unless they have been given supervision or instruction concerning use of the unit by a person responsible for their safety.
Children should be supervised to ensure that they do not play with the unit.
This appliance can be used by children aged from 8 years and above and persons with reduced physical, sensory or mental capabilities or lack of experience and knowledge if they have been given supervision or instruction concerning use of the appliance in a safe way and understand the hazards involved.
Cleaning and user maintenance shall not be done by children without supervision.
Children shall not play with the appliance.

Connection to the mains must be made through a disconnecting device, which is integrated into the fixed wiring system in accordance with the wiring rules for design of electrical units, and has a contact separation in all poles that allows for full disconnection under overvoltage category III conditions.

Ensure that the unit is switched off from the supply mains before removing the guard.

Precautions must be taken to avoid the back-flow of gases into the room from the open flue of gas or other fuel-burning appliances.

The appliance may adversely affect the safe operation of appliances burning gas or other fuels (including those in other rooms) due to back flow of combustion gases. These gases can potentially result in carbon monoxide poisoning. After installation of the unit the operation of flued gas appliances should be tested by a competent person to ensure that back flow of combustion gases does not occur.

All operations described in this manual must be performed by qualified personnel only, properly trained and qualified to install, make electrical connections and maintain ventilation units.
Do not attempt to install the product, connect it to the mains, or perform maintenance yourself.
This is unsafe and impossible without special knowledge.
Disconnect the power supply prior to any operations with the unit.
All user's manual requirements as well as the provisions of all the applicable local and national construction, electrical, and technical norms and standards must be observed when installing and operating the unit.
Disconnect the unit from the power supply prior to any connection, servicing, maintenance, and repair operations.
Connection of the unit to power mains is allowed by a qualified electrician with a work permit for the electric units up to 1000 V after careful reading of the present user's manual.
Check the unit for any visible damage of the impeller, the casing, and the grille before starting installation. The casing internals must be free of any foreign objects that can damage the impeller blades.
While mounting the unit, avoid compression of the casing! Deformation of the casing may result in motor jam and excessive noise.
Misuse of the unit and any unauthorised modifications are not allowed.
Transported air must not contain any dust or other solid impurities, sticky substances, or fibrous materials.
Do not use the unit in a hazardous or explosive environment containing spirits, gasoline, insecticides, etc.
Do not close or block the intake or extract vents in order to ensure the efficient air flow.
Do not sit on the unit and do not put objects on it.
The information in this user's manual was correct at the time of the document's preparation.
The Company reserves the right to modify the technical characteristics, design, or configuration of its products at any time in order to incorporate the latest technological developments.
Never touch the unit with wet or damp hands.
Never touch the unit when barefoot.
Do not install or use the product until all construction and finishing work has been completed in the room where it is to be installed.
BEFORE INSTALLING ADDITIONAL EXTERNAL DEVICES, READ THE RELEVANT USER MANUALS.

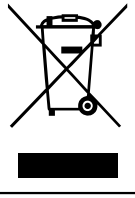

THE PRODUCT MUST BE DISPOSED SEPARATELY AT THE END OF ITS SERVICE LIFE.

DO NOT DISPOSE THE UNIT AS UNSORTED DOMESTIC WASTE.

PURPOSE

The unit is designed to ensure continuous mechanical air exchange in houses, offices, hotels, cafes, conference halls, and other utility and public spaces as well as to recover the heat energy contained in the air extracted from the premises to warm up the filtered stream of intake air.
The unit is not intended for organizing ventilation in swimming pools, saunas, greenhouses, summer gardens, and other spaces with high humidity.
Due to the ability to save heating energy by means of energy recovery, the unit is an important element of energy-efficient premises.
The unit is a component part and is not designed for stand-alone operation. It is rated for continuous operation.
Transported air must not contain any flammable or explosive mixtures, evaporation of chemicals, sticky substances, fibrous materials, coarse dust, soot and oil particles or environments favourable for the formation of hazardous substances (toxic substances, dust, pathogenic germs).

THE UNIT SHOULD NOT BE OPERATED BY CHILDREN OR PERSONS WITH REDUCED PHYSICAL, MENTAL, OR SENSORY CAPACITIES, OR THOSE WITHOUT THE APPROPRIATE TRAINING.

THE UNIT MUST BE INSTALLED AND CONNECTED ONLY BY PROPERLY QUALIFIED PERSONNEL AFTER THE APPROPRIATE BRIEFING.

THE CHOICE OF UNIT INSTALLATION LOCATION MUST PREVENT UNAUTHORISED ACCESS BY UNATTENDED CHILDREN.

DELIVERY SET

Name	Number
Air handling unit	1 pc.
User's manual	1 pc.
Control panel*	1 pc.
Installation kit	1 pc.
Packing box	1 pc.

*Control panel is not included in delivery set of units equipped with A21 controller.

DESIGNATION KEY

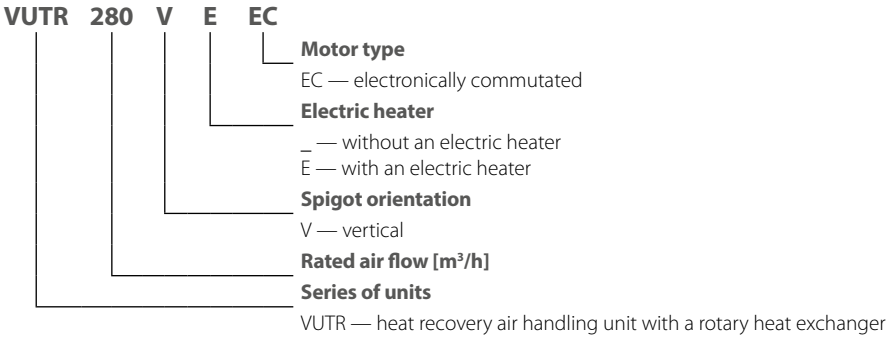

TECHNICAL DATA

The unit is designed for indoor application with the ambient temperature ranging from +1 °C up to +40 °C and relative humidity up to 60 % without condensation. In cold, damp rooms, there is a possibility of freezing or condensation inside and outside the casing.
In order to prevent condensation on the internal walls of the unit, it is necessary that the surface temperature of the casing is 2-3 °C above the dew point temperature of the transported air.
The unit should be operated continuously, and in cases where ventilation is not necessary, reduce the air flow of the fans to a minimum (20%). This will ensure a favorable indoor climate and reduce the amount of condensation inside the unit, which can damage electronic components. Never use the unit for dehumidification, for example, of new buildings.
The unit is rated as a Class I electrical appliance.
Hazardous parts access and water ingress protection rating:
IP22 for the unit connected to the air ducts
IP44 for the unit motors
The unit design is constantly being improved, thus some models may be slightly different from those described in this manual.

TECHNICAL DATA

Parameter		VUTR 280 V EC	VUTR 280 VE EC
Unit voltage [V/50 (60) Hz]		1~ 230	
Maximum unit power (without a heater) [W]		195	
Maximum heater power [W]			650
Maximum unit power (with a heater) [W]		195	845
Maximum unit current (without a heater) [A]		1.9	
Maximum heater current [A]		-	2.8
Maximum unit current (with a heater) [A]		1.9	4.7
Maximum air flow [m^3/h]		300	
RPM, min^{-1}		2050	
Sound pressure level at 3 m distance [dBA]		26*	
Maximum transported air temperature [°C]		from -25 up to +40	
Casing material		painted steel	
Insulation		40 mm mineral wool	
Filter:	extract	G4	
	supply	F7	
Connected air duct diameter [mm]		125	
Weight [kg]		63	64
Heat recovery efficiency [%]		from 81 up to 90	
Heat exchanger type		rotary	
Heat exchanger material		aluminium	
SEC class		A	

*Sound pressure level: dB(A) figures are average spherical free-field, at 70 % airflow and 50 Pa, for comparitive use only.
During the first 2-3 weeks of operation, a slight increase in sound pressure level is possible due to the adaptation of the geometric dimensions of the rotary recuperator seal.

OVERALL DIMENSIONS OF THE UNIT [mm]

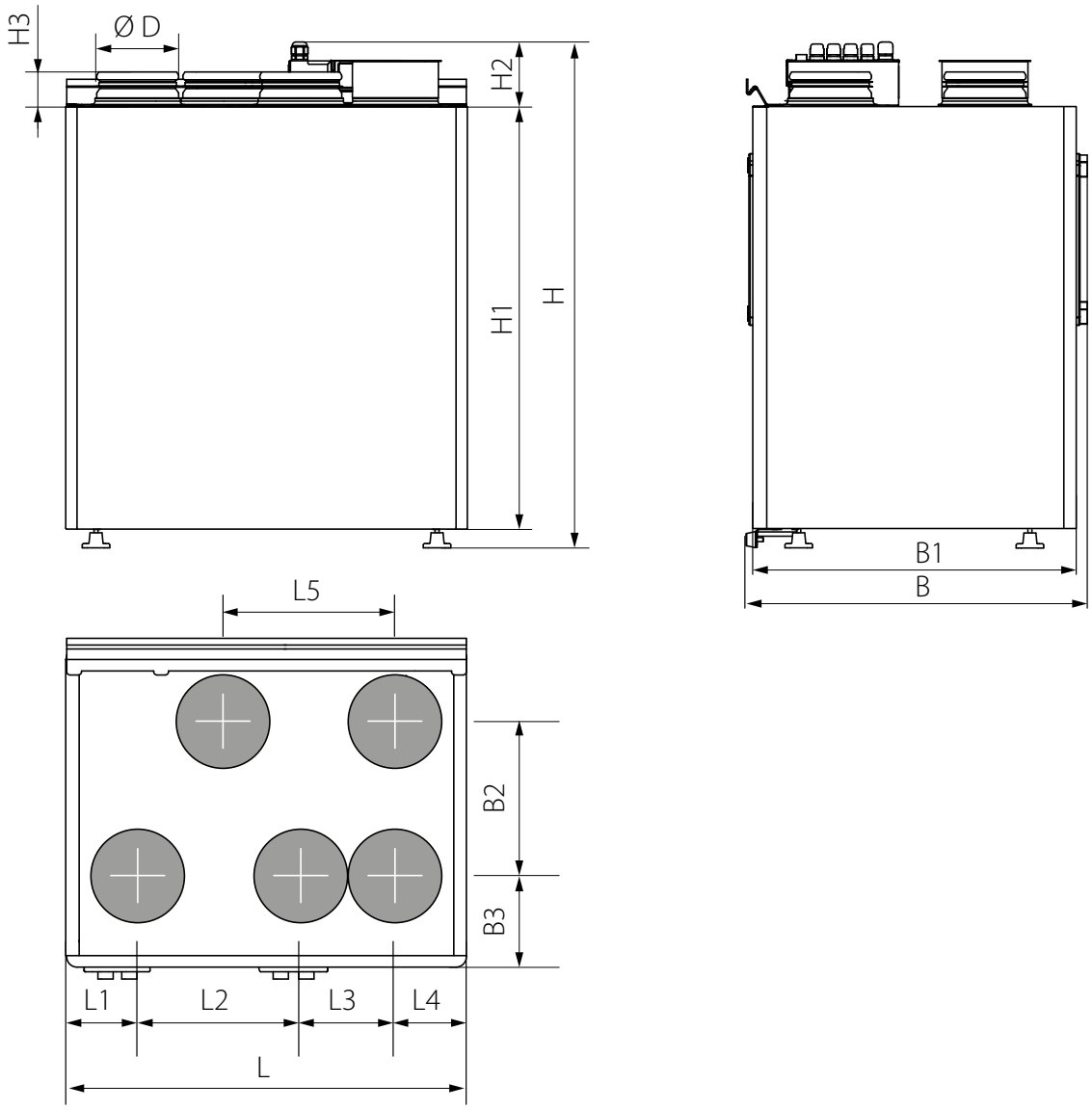

Model	D	L	L1	L2	L3	L4	L5	B	B1	B2	B3	H	H1	H2	H3
VUTR 280 V (E) EC	125	598	107	243	141	107	256	520	482	230	136	754	630	97	73

* The unit is equipped with height adjustable feet to compensate for uneven flooring.

DESIGN AND OPERATING PRINCIPLE

The unit has the following operating principle: Warm stale extract air from the room flows to the unit, where it is filtered. Then the air is moved through the rotary heat exchanger and is exhausted outside with the extract fan.
Clean cold air from outside is moved to the intake filter. Then filtered air flows through the rotary heat exchanger and the electric heater (for the VUTR 280 VE EC units) where it is warmed up to the set temperature and is moved to the room with the supply fan. Heat energy of warm extract air is transferred to clean intake fresh air from outside and warms it up.
Heat recovery minimizes heat losses and space heating expenses in cold seasons and cooling expanses in warm seasons.
The unit is equipped with an additional extract spigot for connecting a kitchen hood.

UNIT OPERATION LOGIC

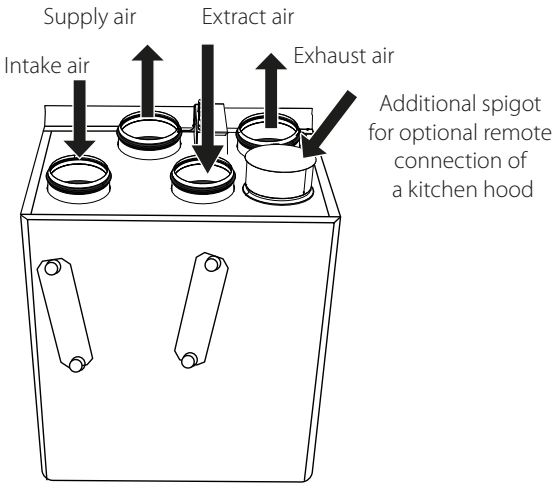

UNIT DESIGN

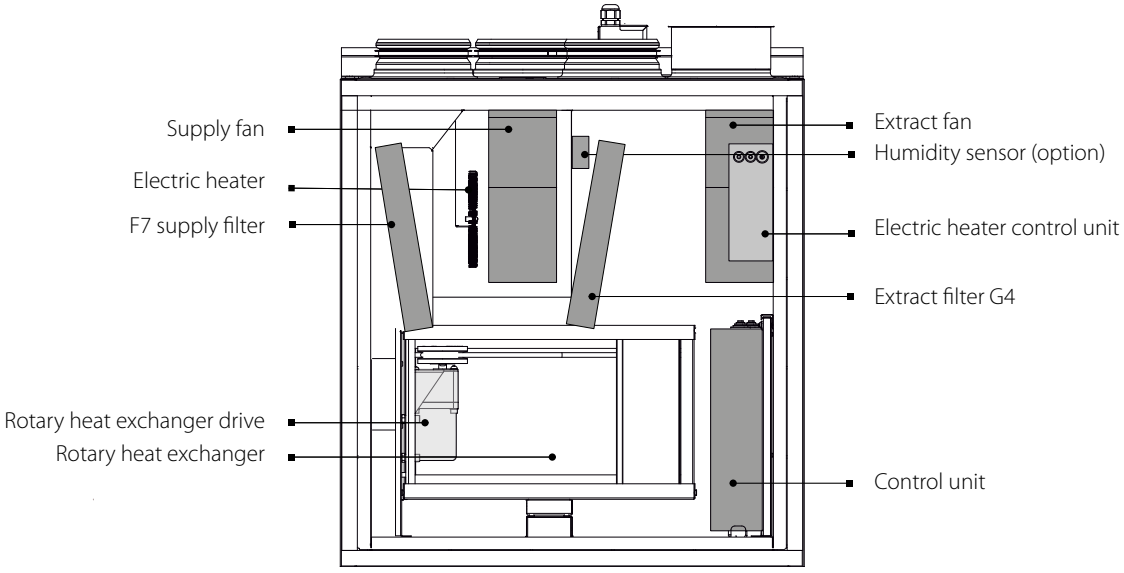

INSTALLATION AND SET-UP

READ THE USER'S MANUAL BEFORE INSTALLING THE UNIT.

THE UNIT MUST BE MOUNTED BY A QUALIFIED EXPERT ONLY, PROPERLY TRAINED AND HAVING THE REQUIRED TOOLS AND MATERIALS.

While installing the unit, provide enough access for maintenance or repair work.
When selecting an installation location of the unit, provide free opening of the service panel.

To get the best performance of the unit and to minimize turbulence-induced air pressure losses, connect the straight air duct section to the spigots on both sides of the unit while installing.

Minimum straight air duct length:
- equal to 1 air duct diameter on the intake side
- equal to 3 air duct diameters on the outlet side

If the air ducts are too short or not connected, protect the unit parts from ingress of foreign objects. To prevent uncontrollable access to the fans, the spigots may be covered with a protecting grille or other protecting device with mesh width not more than 12.5 mm.

While installing the unit, ensure convenient access for subsequent maintenance and repair. The unit must be mounted on a plane wall. Installing the unit to an uneven surface could lead to the unit's casing distortion and operation disturbance.

The unit is designed for mounting on a horizontal surface as well as for wall mounting with a fixing bracket that is fastened with screws and dowels (not included in the delivery set).

UNIT WALL MOUNTING

When selecting the installation site provide minimum allowed distances to the unit.

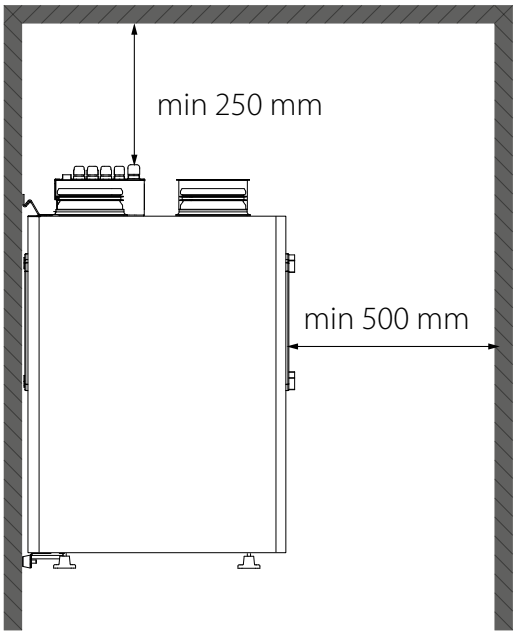

Attach the wall mounting bracket to the wall using dowels with screws (not included in the delivery set). Attach the wall mounting bracket to the wall considering the wall material and the unit weight.

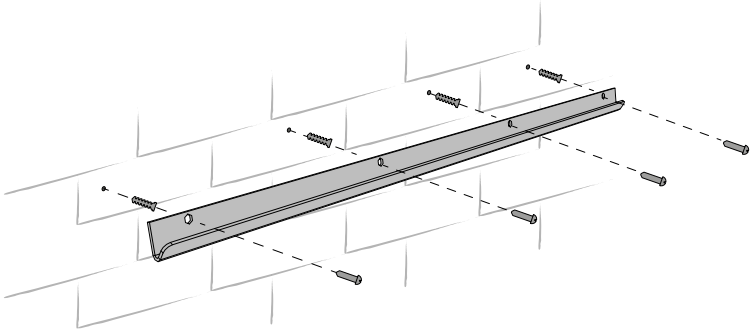

Install the unit on the mounting bracket. Suspend it carefully. Make sure the unit is fastened securely prior to operation.

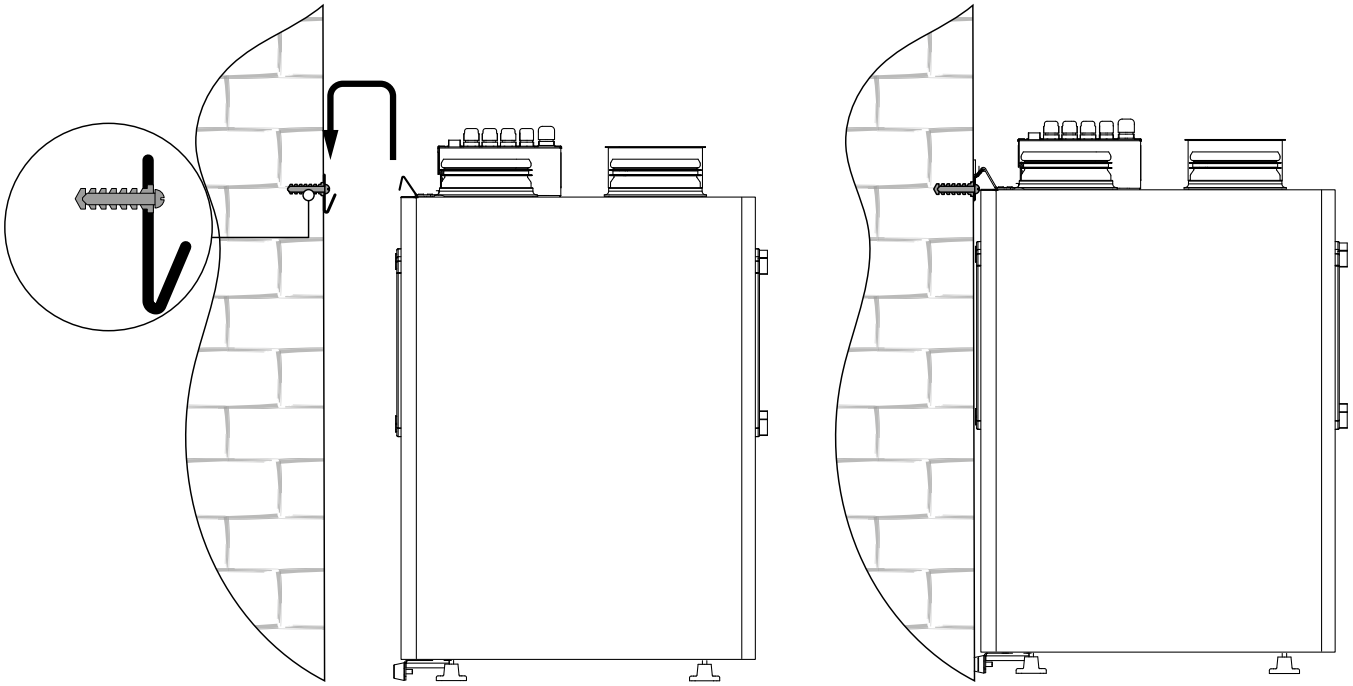

UNIT FLOOR MOUNTING

Place the unit on a flat, stable surface that has sufficient load capacity matching the unit weight and meets safety requirements. Ensure a stable position of the unit by screwing and unscrewing its feet.

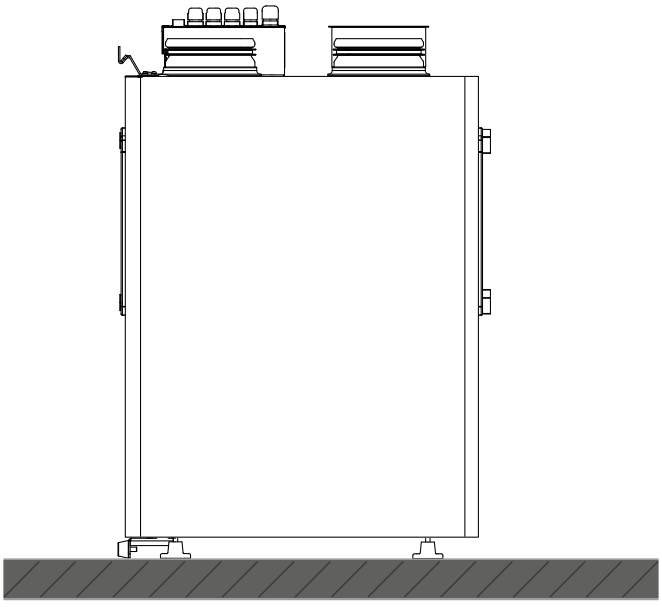

HUMIDITY SENSOR MOUNTING

The HV2 humidity sensor is not included in the delivery set and can be ordered separately.
To install the humidity sensor, take off the front panel and remove the extract filter out of the unit.

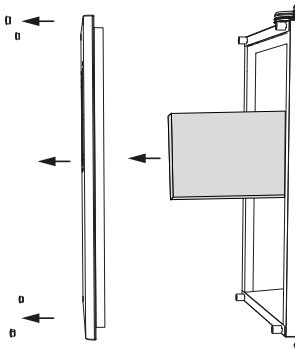

Install the humidity sensor into the mounting bracket on the inner side of the unit.
Connect the cable with a connector (located inside the unit) to the sensor.

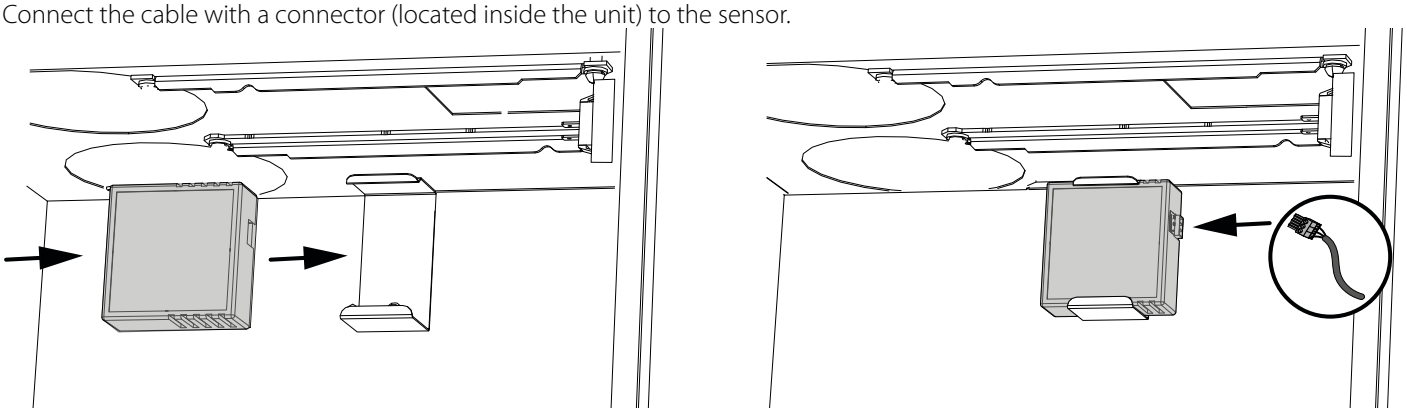

SERVICE SIDE CHANGE

1. Make sure of the correct unit service side selection. Unit mounting position should enable free excess to the service panel for maintenance and service operations.

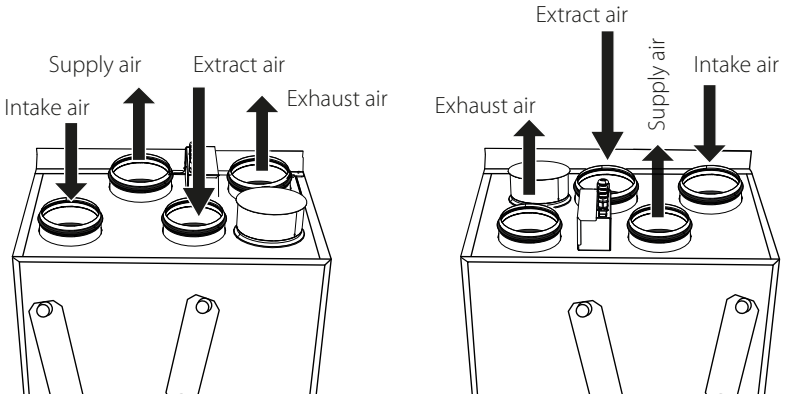

2. Unscrew the 6 screws and remove the mounting bracket. Attach the mounting bracket to the opposite side of the unit. Unscrew the two screws on the side stops (located at the bottom of the unit) and attach them to the opposite side.

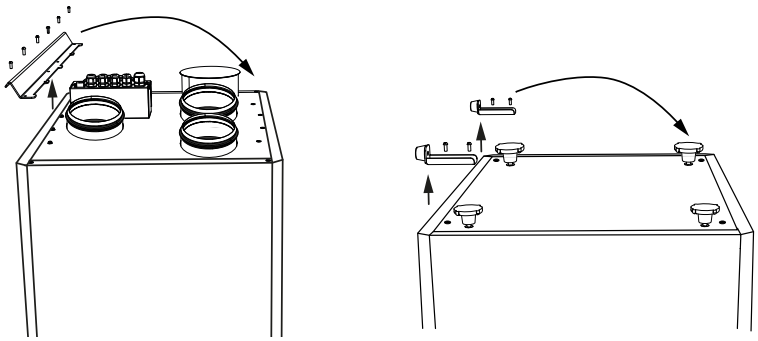

CONNECTION TO POWER MAINS

POWER OFF THE POWER SUPPLY PRIOR TO ANY OPERATIONS WITH THE UNIT.
THE UNIT MUST BE CONNECTED TO POWER SUPPLY BY A QUALIFIED ELECTRICIAN.
THE RATED ELECTRICAL PARAMETERS OF THE UNIT ARE GIVEN ON THE MANUFACTURER'S LABEL.

ANY TAMPERING WITH THE INTERNAL CONNECTIONS IS PROHIBITED AND WILL VOID THE WARRANTY.

- The unit is rated for connection to 1~230 V/50(60) Hz power mains.
- The unit must be connected to power mains using insulated electric conductors (cables, wires). The actual wire cross section selection must be based on the maximum load current, maximum conductor temperature depending on the wire type, insulation, length and installation method.
- The external power input must be equipped with an automatic circuit breaker built into the stationary wiring to open the electric circuit in case of overload or short-circuit. The circuit breaker installation place must provide quick access for emergency shutdown of the unit. The trip current of the automatic circuit breaker **QF** must exceed the maximum current consumption of the unit (refer to the technical data table). The recommended trip current of the circuit breaker is the next current in the standard trip current row following the maximum current of the connected unit. The automatic circuit breaker is not included in the delivery set.

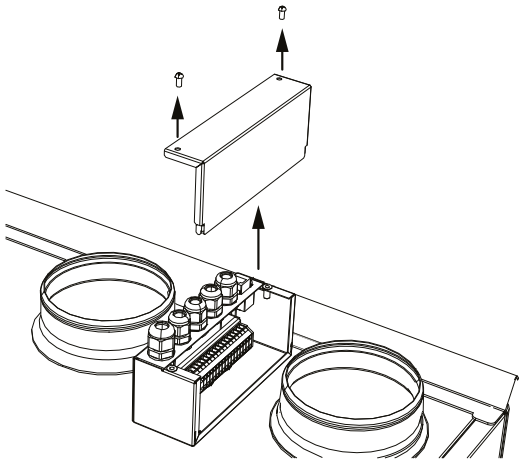

Access to the terminal block

EXTERNAL CONTROL UNITS WIRING DIAGRAM OF THE VUTR 280 V(E) EC A17/A18 UNITS

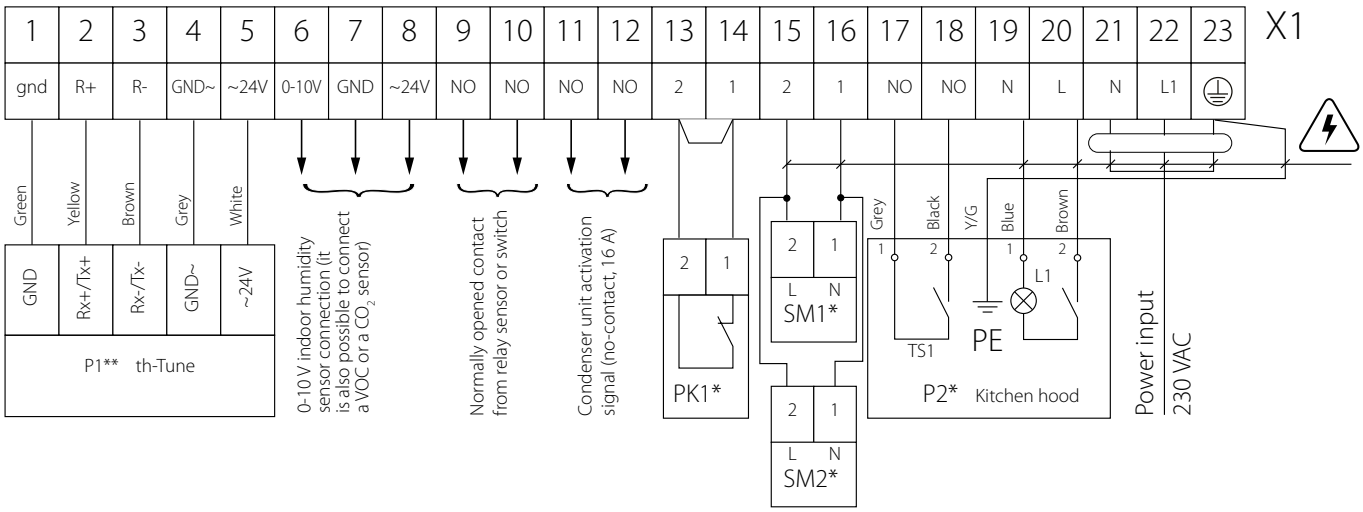

⚠ – Electric shock hazard!

Design	Name	Model	Wire***
SM1*	Exhaust or supply air damper electric actuator	LF230	2x0.75 mm²
SM2*	Exhaust or supply air damper electric actuator	LF230	2x0.75 mm²
PK1*	Contact from fire alarm panel	NC	2x0.75 mm²
P1**	Remote control panel	th-Tune	5x0.25 mm²
P2*	Kitchen hood		

*The appliances are not supplied with the unit, are available on the separate order.
** The unit can be equipped with a th-Tune control panel.
*** Wire cross-section at a cable length of maximum 100 m.

Maximum cable length from controller to control panel

Cable type	Distance between the controller and the control panel
Phone cable	up to 50 m
AWG24 shielded cable	up to 200 m

EXTERNAL CONTROL UNITS WIRING DIAGRAM OF THE VUTR 280 V(E) EC A21 UNITS

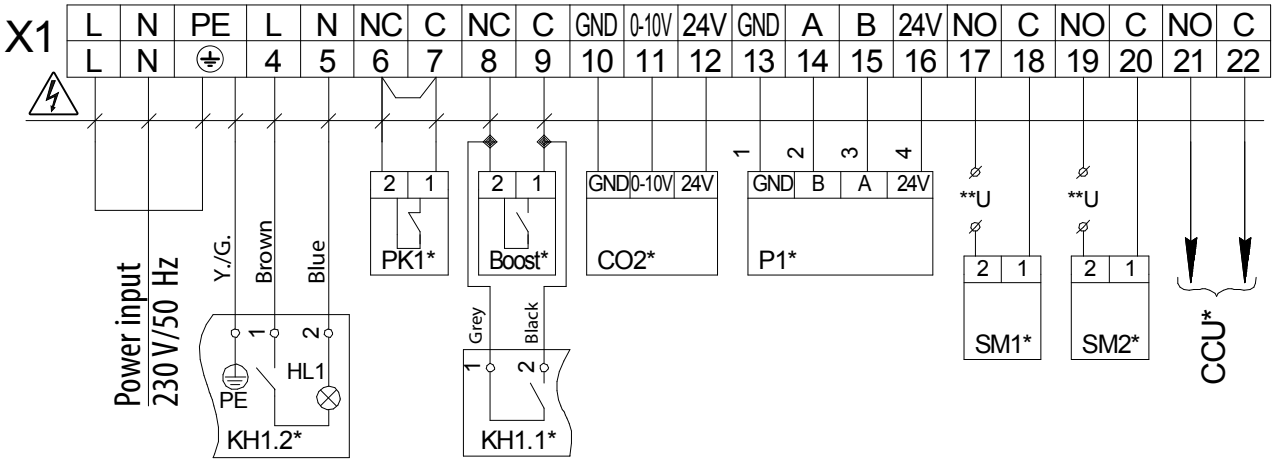

⚠ – Electric shock hazard!

Designation	Name	Contact type	Cable type	Notice
SM1*	Supply air damper actuator	NO	2 x 0.75 mm²	3 A, 30DC/~250 AC
SM2*	Exhaust air damper actuator	NO		3 A, 30DC/~250 AC
PK1*	Contact from fire alarm panel	NC		Remove the jumper
CCU*	Cooler control	NO		3 A, 30DC/~250 AC
P1*	External control panel		4 x 0.25 mm²	
Boost*	Contacts ON/OFF Boost	NO	2 x 0.25 mm²	
CO2*	Contacts ON/OFF CO_2		3 x 0.75 mm²	
KH1*	Kitchen hood		5 x 0.75 mm²	

* Is not included in the delivery set.
** The supply voltage U of external dampers SM1, SM2 is selected depending on the type of dampers.
Output parameters: terminals 15-20 - 3A, 30VDC / ~ 250VAC ("dry contact").

The maximum cable length from external devices to the terminal block should not exceed 100 meters. The recommended cable cross-section is shown in the table.

TECHNICAL MAINTENANCE

DISCONNECT THE UNIT FROM POWER SUPPLY BEFORE ANY MAINTENANCE OPERATIONS!

Maintenance operations of the unit are required 3-4 times per year. They include general cleaning of the unit and the following operations:

1. Filter maintenance.
Dirty filters increase air resistance in the system and reduce supply air volume. The filters require cleaning not less than 3-4 times per year. When 3 000 operating hours have elapsed, the unit controller generates the filter replacement or cleaning alert. Clean or replace the filters and reset the hour meter.
Vacuum cleaning is allowed. After two consecutive cleanings filters must be replaced.
For new filters contact the Seller.
Sequence of filter removal:
1. Disconnect the unit from power mains.
2. Remove the filter covers.
3. Remove the filters.

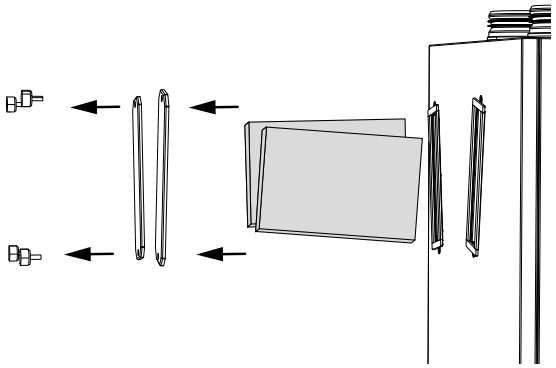

2. Heat exchanger maintenance (once per year).
Some dust may accumulate on the heat exchanger even in case of regular maintenance of the filters. To maintain the high heat recovery efficiency, regular cleaning of the heat exchanger is required. To clean the heat exchanger, remove it from the unit and clean the heat exchanger by using compressed air or a vacuum cleaner. After cleaning re-install the heat exchanger into the unit. Sequence of heat exchanger removal:
1. Disconnect the unit from power mains.
2. Remove the filter covers.
3. Remove the side cover.
4. Disconnect the rotary heat exchanger and then unlatch and pull it to remove.

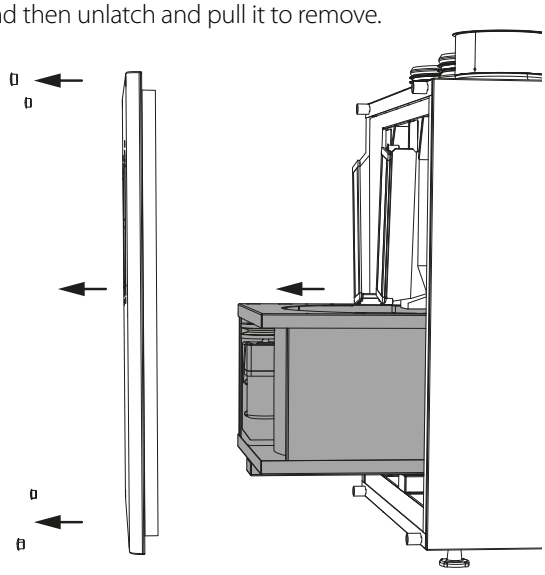

3. Fan maintenance (once per year).
Even in case of regular maintenance of the filters, some dust may accumulate inside the fans and reduce the fan performance and supply air flow.
Clean the fans with a soft cloth or a brush.
Do not use water, aggressive solvents, or sharp objects as they may damage the impeller.
4. Supply air flow control (twice per year).
The supply duct grille may get clogged with leaves and other objects reducing the unit performance and supply air delivery. Check the supply grille twice per year and clean it as required.
5. Ductwork system maintenance (once in 5 years).
Even regular fulfilling of all the maintenance operations prescribed above may not completely prevent dirt accumulation in the air ducts, which leads to air pollution and reduces the unit capacity.
Duct maintenance means regular cleaning or replacement.

PROBLEM	POSSIBLE REASONS	TROUBLESHOOTING
The fan(s) does not start when the unit is on.	No power supply.	Make sure the power supply line is connected correctly, otherwise troubleshoot the connection error.
	The motor is jammed, the impeller blades are soiled.	Turn the unit off. Troubleshoot the motor jam and the impeller clogging. Clean the blades. Restart the unit.
	Alarm in the system. System alarms are listed below.	Identify the system failure by entering the active alarms menu and eliminate the alarm. If the system alarm cannot be eliminated by the user, contact the Seller.
Automatic circuit breaker tripping when the unit is switched on.	High current consumption due to short circuit in power line.	Turn the unit off. Contact the Seller.
Low air flow.	Low set fan speed.	Set higher speed.
	The filters and the fans are clogged, the heat exchanger is clogged.	Clean or replace the filters, clean the fans, and the heat exchanger.
	Ventilation system elements (air ducts, diffusers, louver shutters, grilles) are clogged, damaged, or closed.	Clean or replace the ventilation system elements, such as air ducts, diffusers, louver shutters, grilles.
Cold supply air.	The extract filter is soiled.	Clean or replace the extract filter.
	The unit operates in Cooling mode.	Check the unit operation settings.
Noise, vibration.	The impeller(s) is soiled.	Clean the impeller(s).
	The fan or casing screw connection is loose.	Tighten the screw connection of the fans or the casing against stop.
	No anti-vibration connectors on air duct pipe flanges.	Install anti-vibration connectors.
Room terminal is faulty.	No connection with a control panel.	Check the connection of the controller with the control panel. Contact the Seller.

STORAGE AND TRANSPORTATION REGULATIONS

- Store the unit in the manufacturer's original packaging box in a dry closed ventilated premise with temperature range from +5 ˚C to +40 ˚C and relative humidity up to 70 %.
- Storage environment must not contain aggressive vapors and chemical mixtures provoking corrosion, insulation, and sealing deformation.
- Use suitable hoist machinery for handling and storage operations to prevent possible damage to the unit.
- Follow the handling requirements applicable for the particular type of cargo.
- The unit can be carried in the original packaging by any mode of transport provided proper protection against precipitation and mechanical damage. The unit must be transported only in the working position.
- Avoid sharp blows, scratches, or rough handling during loading and unloading.
- Prior to the initial power-up after transportation at low temperatures, allow the unit to warm up at operating temperature for at least 3-4 hours.

MANUFACTURER'S WARRANTY

The product is in compliance with EU norms and standards on low voltage guidelines and electromagnetic compatibility. We hereby declare that the product complies with the provisions of Electromagnetic Compatibility (EMC) Directive 2014/30/EU of the European Parliament and of the Council, Low Voltage Directive (LVD) 2014/35/EU of the European Parliament and of the Council and CE-marking Council Directive 93/68/EEC. This certificate is issued following test carried out on samples of the product referred to above.
The manufacturer hereby warrants normal operation of the unit for 24 months after the retail sale date provided the user's observance of the transportation, storage, installation, and operation regulations. Should any malfunctions occur in the course of the unit operation through the Manufacturer's fault during the guaranteed period of operation, the user is entitled to get all the faults eliminated by the manufacturer by means of warranty repair at the factory free of charge. The warranty repair includes work specific to elimination of faults in the unit operation to ensure its intended use by the user within the guaranteed period of operation. The faults are eliminated by means of replacement or repair of the unit components or a specific part of such unit component.

The warranty repair does not include:

- routine technical maintenance
- unit installation/dismantling
- unit setup

To benefit from warranty repair, the user must provide the unit, the user's manual with the purchase date stamp, and the payment paperwork certifying the purchase. The unit model must comply with the one stated in the user's manual. Contact the Seller for warranty service.

The manufacturer's warranty does not apply to the following cases:

- User's failure to submit the unit with the entire delivery package as stated in the user's manual including submission with missing component parts previously dismounted by the user.
- Mismatch of the unit model and the brand name with the information stated on the unit packaging and in the user's manual.
- User's failure to ensure timely technical maintenance of the unit.
- Damage to the unit casing and internal components caused by the user.
- Redesign or engineering changes to the unit.
- Replacement and use of any assemblies, parts and components not approved by the manufacturer.
- Unit misuse.
- Violation of the unit installation regulations by the user.
- Violation of the unit control regulations by the user.
- Unit connection to power mains with a voltage different from the one stated in the user's manual.
- Unit breakdown due to voltage surges in power mains.
- Discretionary repair of the unit by the user.
- Unit repair by any persons without the manufacturer's authorization.
- Expiration of the unit warranty period.
- Violation of the unit transportation regulations by the user.
- Violation of the unit storage regulations by the user.
- Wrongful actions against the unit committed by third parties.
- Unit breakdown due to circumstances of insuperable force (fire, flood, earthquake, war, hostilities of any kind, blockades).
- Missing seals if provided by the user's manual.
- Failure to submit the user's manual with the unit purchase date stamp.
- Missing payment paperwork certifying the unit purchase.



FOLLOWING THE REGULATIONS STIPULATED HEREIN WILL ENSURE A LONG AND TROUBLE-FREE OPERATION OF THE UNIT



USER'S WARRANTY CLAIMS SHALL BE SUBJECT TO REVIEW ONLY UPON PRESENTATION OF THE UNIT, THE PAYMENT DOCUMENT AND THE USER'S MANUAL WITH THE PURCHASE DATE STAMP

CERTIFICATE OF ACCEPTANCE

Unit Type	Heat recovery air handling unit
Model	
Serial Number	
Manufacture Date	
Quality Inspector's Stamp	

SELLER INFORMATION

Seller	
Address	
Phone Number	
E-mail	
Purchase Date	
This is to certify acceptance of the complete unit delivery with the user's manual. The warranty terms are acknowledged and accepted.	
Customer's Signature	

Seller's Stamp

INSTALLATION CERTIFICATE

The _____ unit is installed pursuant to the requirements stated in the present user's manual.		
Company name		
Address		
Phone Number		
Installation Technician's Full Name		
Installation Date:	**Signature:**	
The unit has been installed in accordance with the provisions of all the applicable local and national construction, electrical and technical codes and standards. The unit operates normally as intended by the manufacturer.		
Signature:		

Installation Stamp

WARRANTY CARD

Unit Type	Heat recovery air handling unit
Model	
Serial Number	
Manufacture Date	
Purchase Date	
Warranty Period	
Seller	

Seller's Stamp



Manufacturer: Ventilation Systems LLC,
Ukraine, Kyiv, 1 M. Kotsyubynskoho Street
Address of production facilities:
Ukraine, Kyiv Region, Fastiv District, Boyarka, 36 Sobornosti Street

V140-2EN-03