VVG 900x500

Flexible anti-vibration inserts for round air ducts



	Unit of measurement	VVG 900x500
Weight	kg	3

Dimensions

B	B1	B2	H	H1	H2
900	920	940	500	520	540

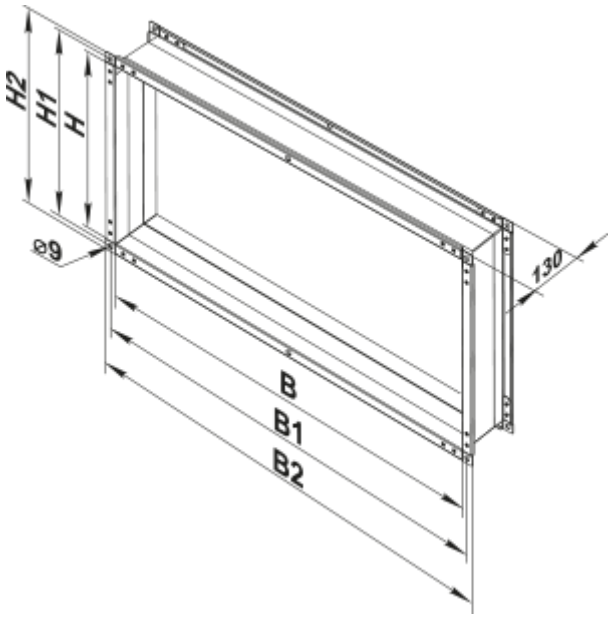
H2
H1
H
ø9
130
B
B1
B2