VVG 300x150

Flexible anti-vibration inserts for round air ducts



	Unit of measurement	VVG 300x150
Weight	kg	0.83

Dimensions

B	B1	B2	H	H1	H2
300	320	340	150	170	190

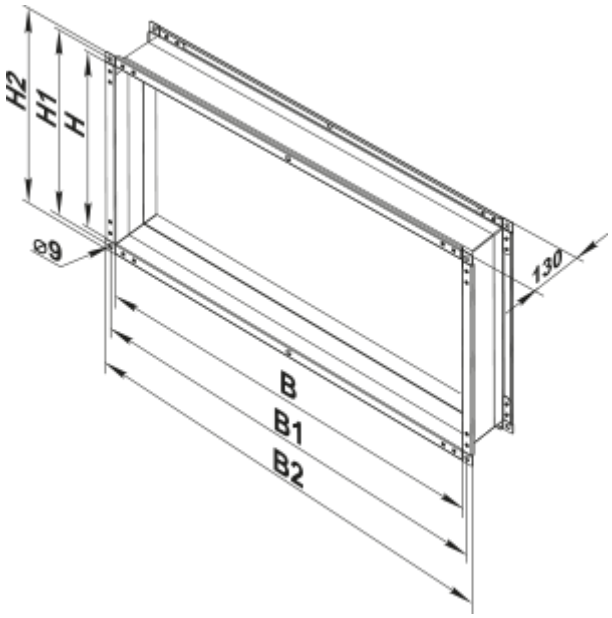
H2
H1
H
ø9
130
B
B1
B2