VUTR 900 WH EC A18



Horizontal air handling units with a rotary heat exchanger

- Sound pressure level LpA at 3 m: 58
- Heat exchanger type: Rotary
- Heat exchanger material: Profiled polystyrene plates
- Supply filter: G4
- Extract filter: G4
- Sound-insulated casing
- Reheater: Water
- Control: Remote Control
- Casing material: Galvanized steel
- Humidity sensor: Optional
- CO2 sensor: Optional
- PM2.5 sensor: Optional

	Unit of measurement	VUTR 900 WH EC A18
Connected air duct size	mm	250
Phases	-	1
Minimum supply voltage	V	230
Maximum supply voltage	V	230
Power supply frequency	Hz	50/60
Rated power	W	440
Unit current	A	1.9
Maximum airflow	m^3/h	900
Rotation speed at 50hz	-	2600
Sound pressure level LpA at 3 m	dB(A)	58
Heat recovery efficiency, max	%	95
Heat exchanger type	-	Rotary
Heat exchanger material	-	Profiled polystyrene plates
Weight	kg	130
Supply filter	-	G4
Extract filter	-	G4
Transported air temperature (max)	°C	40
Transported air temperature (min)	°C	-25
Ambient air temperature max	°C	40

Ambient air temperature min	°C	1
Ingress protection rating	-	IP22
Ambient air humidity max	%	80
Ingress protection rating of the drive	-	IP44

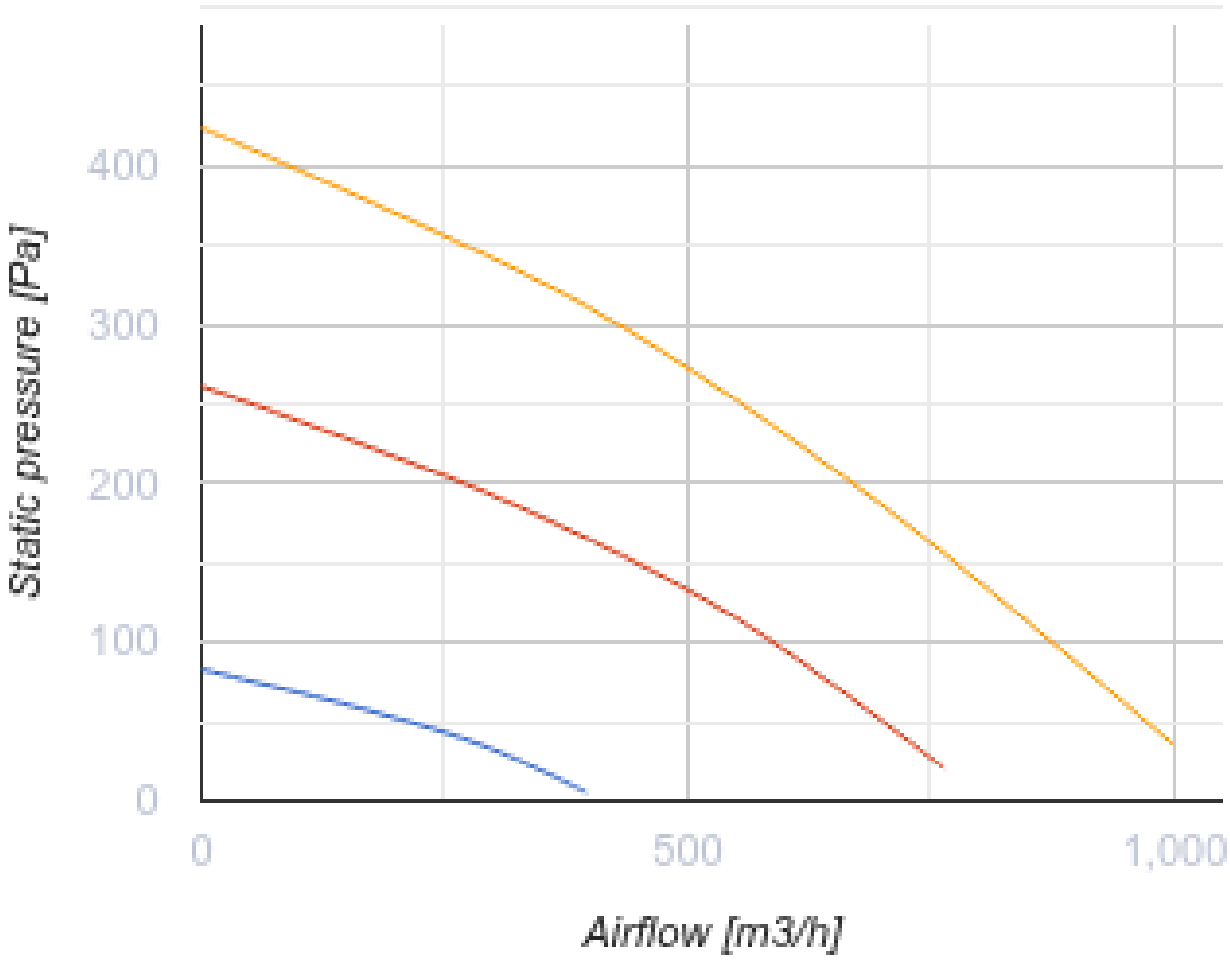

Dimensions

ØD	A	E	F	G	J	H	L	L1
249	1210	243	180	340	580	700	745	260

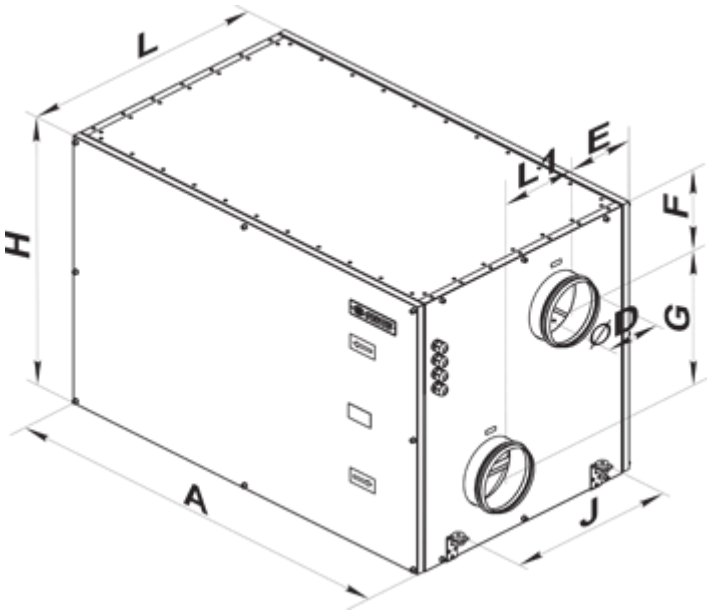

Accessories

Sensors

Name	Photo	Description
HV2		Humidity sensor
HR-S		Electro-mechanical humidistat
DPWC11200		Humidity sensor

VOC sensors

Name	Photo	Description
DPWQ30600		VOC sensors
DPWQ40200		CO2 sensor

For round ducts

Name	Photo	Description
KOM 250		Backdraught damper with spring-loaded plates for shutting off air flow in round air ducts

KRV 250		Air dampers for automatic air flow control in round ducts

Mixing chambers

Name	Photo	Description
USWK 3/4-4		The mixing unit USWK is designed for smooth heat medium flow control in ventilation systems equipped with water heaters or coolers for supply air temperature regulation

Electric actuators

Name	Photo	Description
Belimo TF230		The actuators are designed for controlling air dampers with cross section up to 0.4 m² performing protection functions

Other accessories

Name	Photo	Description
SF 700x332x48 G4		Panel filter G4
PCOS004850		The control module is designed for connection of the pCO series controllers (except for pCOB) to ventilation control systems in compliance with the Modbus RS485 protocol.
SFK 700x333x27 G4		G4 pocket filter