VUTR 400 TH EH EC A17



Horizontal air handling units with a rotary heat exchanger

- Power of electrical preheater: 1400
- Sound pressure level LpA at 3 m: 45
- Heat exchanger type: Rotary
- Heat exchanger material: Profiled polystyrene plates
- Supply filter: G4 (F7 option)
- Extract filter: G4
- Sound-insulated casing
- Preheater: Built-in
- Control: Remote Control
- Casing material: Galvanized steel
- Humidity sensor: Optional
- CO2 sensor: Optional
- PM2.5 sensor: Optional

	Unit of measurement	VUTR 400 TH EH EC A17
Connected air duct size	mm	250
Phases	-	1
Minimum supply voltage	V	230
Maximum supply voltage	V	230
Power supply frequency	Hz	50
Rated power	W	310
Power of electrical preheater	W	1400
Unit current	A	10.9
Maximum airflow	m^3/h	520
Sound pressure level LpA at 3 m	dB(A)	45
Heat recovery efficiency, max	%	85
Heat exchanger type	-	Rotary
Heat exchanger material	-	Profiled polystyrene plates
Weight	kg	150
Supply filter	-	G4 (F7 option)
Extract filter	-	G4
Transported air temperature (max)	°C	40
Transported air temperature (min)	°C	-25
Ambient air temperature min	°C	1

Ambient air temperature max	°C	40
Ingress protection rating	-	IP22
Ambient air humidity max	%	80
Ingress protection rating of the drive	-	IP44

Dimensions

ØD	B	H	L	L1
159	648	710	1250	1421

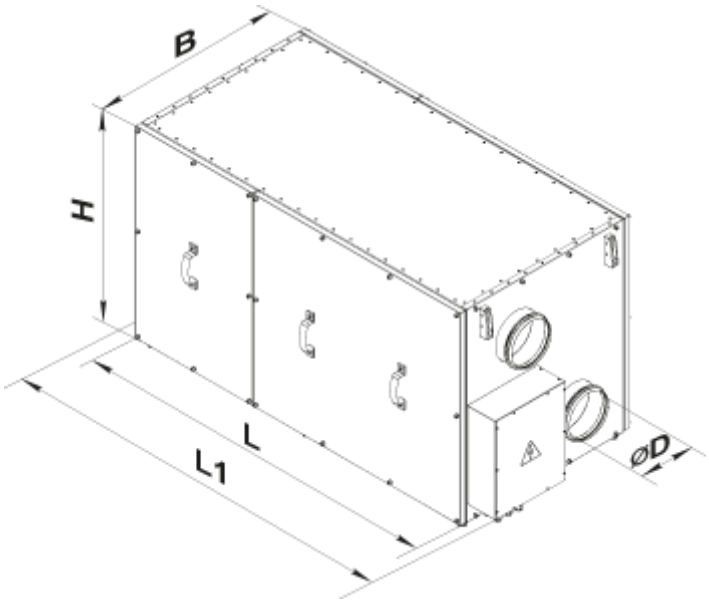

Accessories

Sensors

Name	Photo	Description
HV2		Humidity sensor
DPWC11200		Humidity sensor

VOC sensors

Name	Photo	Description
DPWQ30600		VOC sensors

DPWQ40200		CO2 sensor

For round ducts

Name	Photo	Description
KOM 160		Backdraught damper with spring-loaded plates for shutting off air flow in round air ducts
KRV 160		Air dampers for automatic air flow control in round ducts

Electric actuators

Name	Photo	Description
Belimo TF230		The actuators are designed for controlling air dampers with cross section up to 0.4 m² performing protection functions
Belimo LF230		The Belimo LF series actuators are designed for controlling air dampers with cross section up to 0.8 m² performing protection functions

Other accessories

Name	Photo	Description
SF 600x332x48 G4		Panel filter G4
SFK 600x330x27 F7		F7 pocket filter
SFK 600x330x27 G4		G4 pocket filter