VUTR 2000 EH EC A18

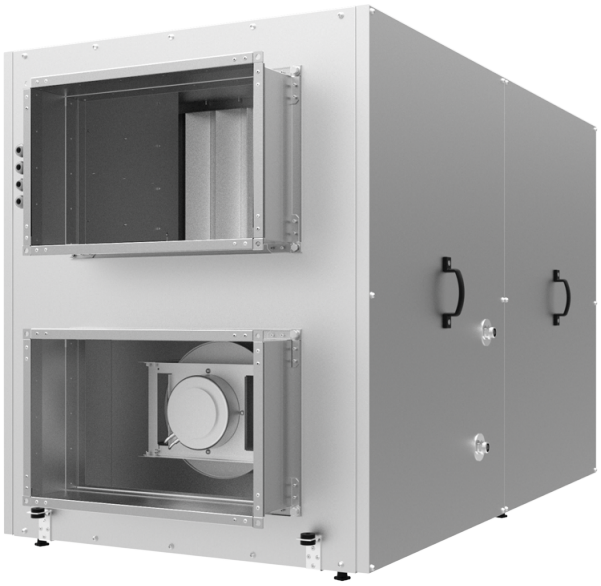

Horizontal air handling units with a rotary heat exchanger

- Power of electrical reheater: 12000
- Sound pressure level LpA at 3 m: 64
- Heat exchanger type: Rotary
- Heat exchanger material: Profiled polystyrene plates
- Supply filter: G4
- Extract filter: G4
- Sound-insulated casing
- Reheater: Electric
- Control: Remote Control
- Casing material: Galvanized steel
- Humidity sensor: Optional
- CO2 sensor: Optional
- PM2.5 sensor: Optional

	Unit of measurement	VUTR 2000 EH EC A18
Connected air duct size	mm	500x300
Phases	-	3
Minimum supply voltage	V	400
Maximum supply voltage	V	400
Power supply frequency	Hz	50/60
Rated power	W	1070
Power of electrical reheater	W	12000
Unit current	A	22.4
Maximum airflow	m^3/h	2250
Rotation speed at 50hz	-	3000
Sound pressure level LpA at 3 m	dB(A)	64
Heat recovery efficiency, max	%	93
Heat exchanger type	-	Rotary
Heat exchanger material	-	Profiled polystyrene plates
Weight	kg	198
Supply filter	-	G4
Extract filter	-	G4
Transported air temperature (max)	°C	40
Transported air temperature (min)	°C	-25

Ambient air temperature min	°C	1
Ambient air temperature max	°C	40
Ingress protection rating	-	IP22
Ambient air humidity max	%	80
Ingress protection rating of the drive	-	IP44

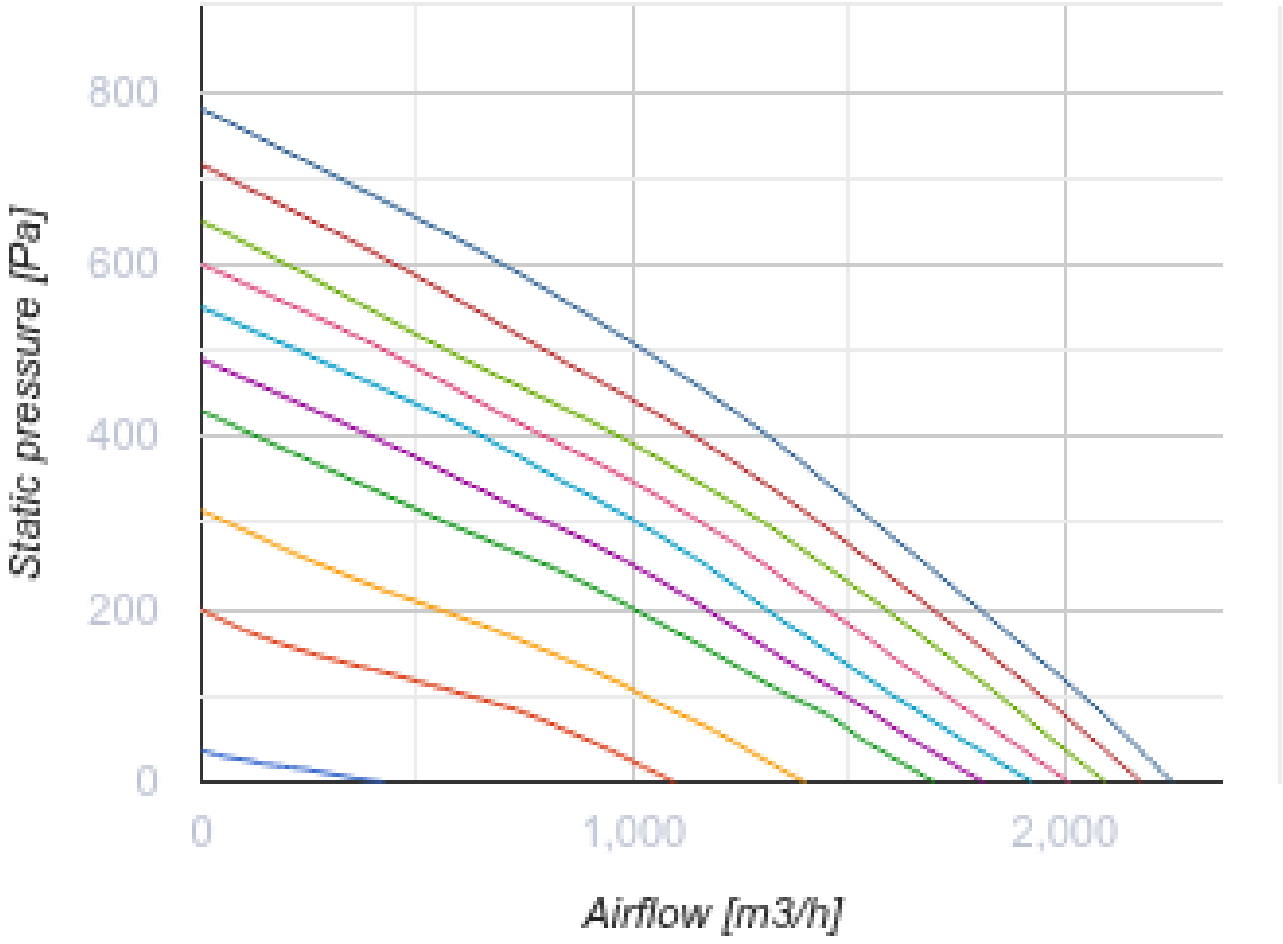

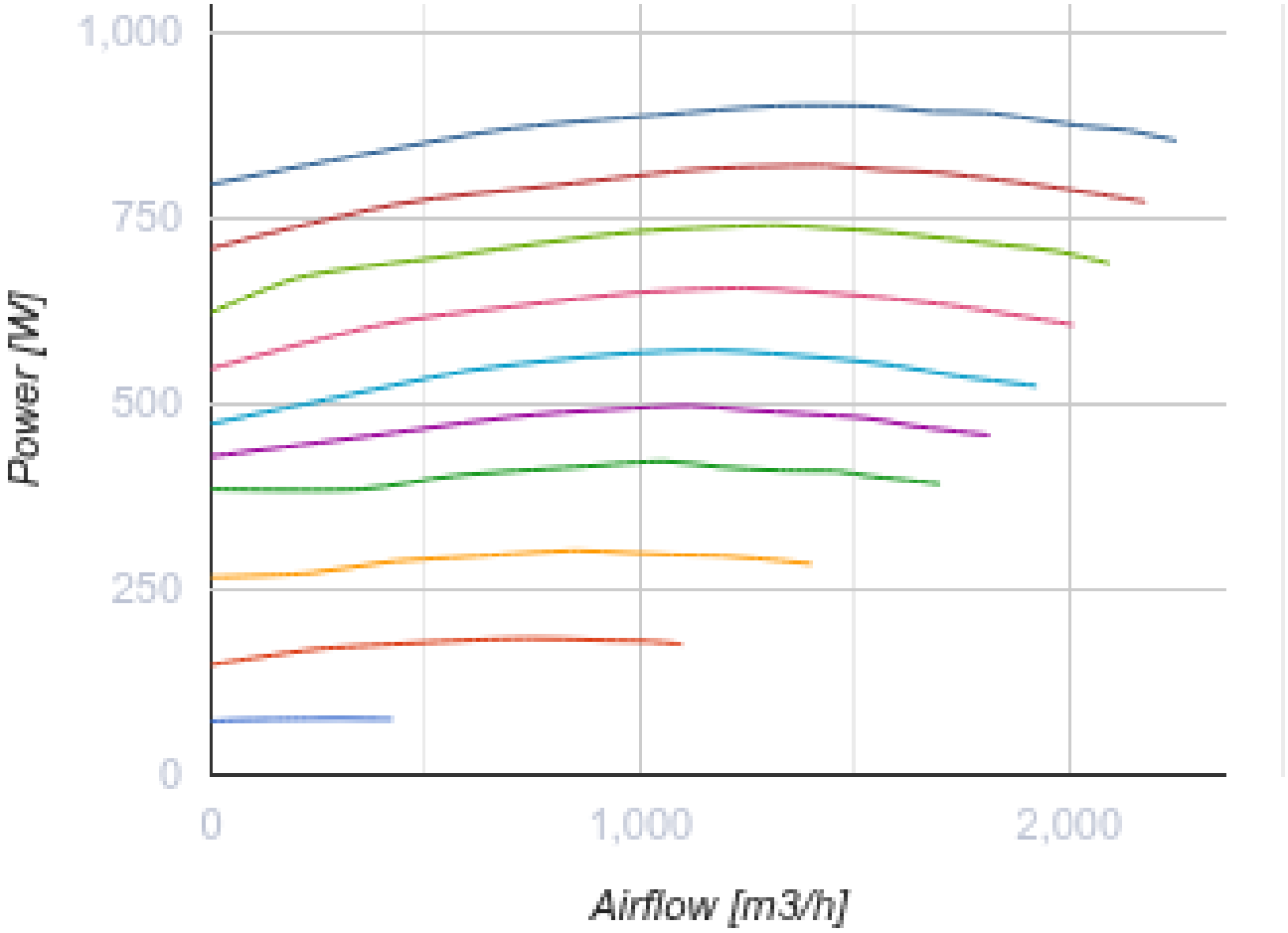

Dimensions

A	F	G	J	H	L
1485	275	480	630	1010	875

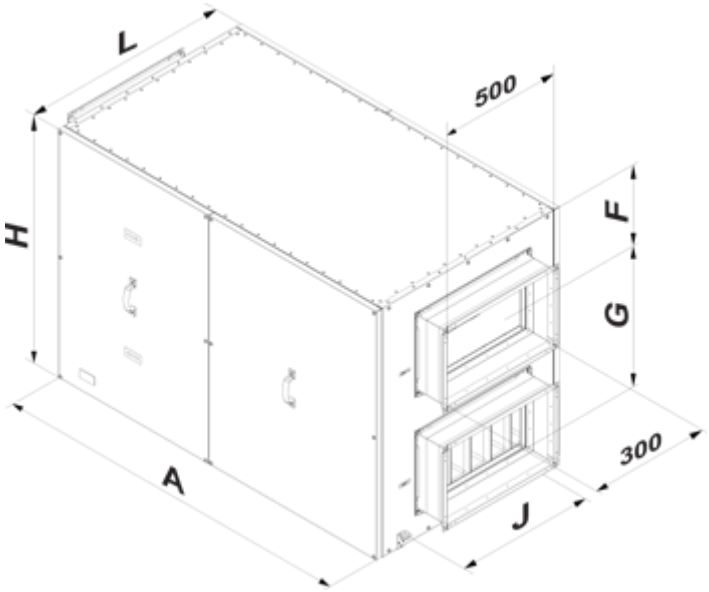

Accessories

Sensors

Name	Photo	Description
HV2		Humidity sensor
HR-S		Electro-mechanical humidistat
DPWC11200		Humidity sensor

VOC sensors

Name	Photo	Description
DPWQ30600		VOC sensors
DPWQ40200		CO2 sensor

For rectangular ducts

Name	Photo	Description
KOM1 500x300		Backdraught gravity dampe for shutting off air flow in rectangular air ducts

KR 500x300		Air dampers for controlling air flow in rectangular air ducts

Electric actuators

Name	Photo	Description
Belimo TF230		The actuators are designed for controlling air dampers with cross section up to 0.4 m² performing protection functions

Other accessories

Name	Photo	Description
SF 800x477x47 G4		Panel filter G4
PCOS004850		The control module is designed for connection of the pCO series controllers (except for pCOB) to ventilation control systems in compliance with the Modbus RS485 protocol.
SFK 800x477x27 G4		G4 pocket filter