VUTR 1500 EH EC A17



Horizontal air handling units with a rotary heat exchanger

- Power of electrical reheater: 9000
- Sound pressure level LpA at 3 m: 62
- Heat exchanger type: Rotary
- Heat exchanger material: Profiled polystyrene plates
- Supply filter: G4
- Extract filter: G4
- Sound-insulated casing
- Reheater: Electric
- Control: Remote Control
- Casing material: Galvanized steel
- Humidity sensor: Optional
- CO2 sensor: Optional
- PM2.5 sensor: Optional

	Unit of measurement	VUTR 1500 EH EC A17
Connected air duct size	mm	315
Phases	-	3
Minimum supply voltage	V	400
Maximum supply voltage	V	400
Power supply frequency	Hz	50/60
Rated power	W	750
Power of electrical reheater	W	9000
Unit current	A	14.1
Maximum airflow	m^3/h	1500
Rotation speed at 50hz	-	2000
Sound pressure level LpA at 3 m	dB(A)	62
Heat recovery efficiency, max	%	95
Heat exchanger type	-	Rotary
Heat exchanger material	-	Profiled polystyrene plates
Weight	kg	175
Supply filter	-	G4
Extract filter	-	G4
Transported air temperature (max)	°C	40
Transported air temperature (min)	°C	-25

Ambient air temperature min	°C	1
Ambient air temperature max	°C	40
Ingress protection rating	-	IP22
Ambient air humidity max	%	80
Ingress protection rating of the drive	-	IP44

Dimensions

ØD	A	E	F	G	J	H	L
314	1430	427	275	460	560	1010	855

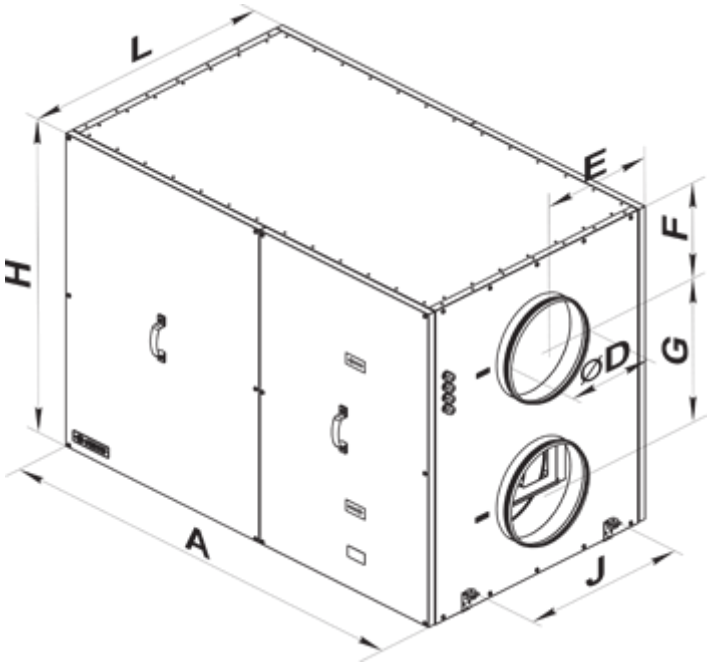

Accessories

Sensors

Name	Photo	Description
HV2		Humidity sensor
HR-S		Electro-mechanical humidistat
DPWC11200		Humidity sensor

VOC sensors

Name	Photo	Description
DPWQ30600		VOC sensors
DPWQ40200		CO2 sensor

For round ducts

Name	Photo	Description
KOM 315		Backdraught damper with spring-loaded plates for shutting off air flow in round air ducts
KRV 315		Air dampers for automatic air flow control in round ducts

Electric actuators

Name	Photo	Description
Belimo CM230		The actuators are designed for controlling air dampers with cross section up to 0.4 m²

Other accessories

Name	Photo	Description
SF 800x477x47 G4		Panel filter G4
PCOS004850		The control module is designed for connection of the pCO series controllers (except for pCOB) to ventilation control systems in compliance with the Modbus RS485 protocol.
SFK 800x477x27 G4		G4 pocket filter