# VUTR 1200 WH EC A18



Horizontal air handling units with a rotary heat exchanger

- Sound pressure level LpA at 3 m: 60
- Heat exchanger type: Rotary
- Heat exchanger material: Profiled polystyrene plates
- Supply filter: G4
- Extract filter: G4
- Sound-insulated casing
- Reheater: Water
- Control: Remote Control
- Casing material: Galvanized steel
- Humidity sensor: Optional
- CO2 sensor: Optional
- PM2.5 sensor: Optional

| | Unit of measurement | VUTR 1200 WH EC A18 |
|---|---|---|
| Connected air duct size | mm | 315 |
| Phases | - | 1 |
| Minimum supply voltage | V | 230 |
| Maximum supply voltage | V | 230 |
| Power supply frequency | Hz | 50/60 |
| Rated power | W | 570 |
| Unit current | A | 2.5 |
| Maximum airflow | m³/h | 1200 |
| Rotation speed at 50hz | - | 1930 |
| Sound pressure level LpA at 3 m | dB(A) | 60 |
| Heat recovery efficiency, max | % | 95 |
| Heat exchanger type | - | Rotary |
| Heat exchanger material | - | Profiled polystyrene plates |
| Weight | kg | 165 |
| Supply filter | - | G4 |
| Extract filter | - | G4 |
| Transported air temperature (max) | °C | 40 |
| Transported air temperature (min) | °C | -25 |
| Ambient air temperature max | °C | 40 |

| | | |
|---|---|---|
| Ambient air temperature min | °C | 1 |
| Ingress protection rating | - | IP22 |
| Ambient air humidity max | % | 80 |
| Ingress protection rating of the drive | - | IP44 |

## Dimensions

| ØD | A | E | F | G | J | H | L |
|---|---|---|---|---|---|---|---|
| 314 | 1335 | 373 | 220 | 438 | 460 | 880 | 745 |

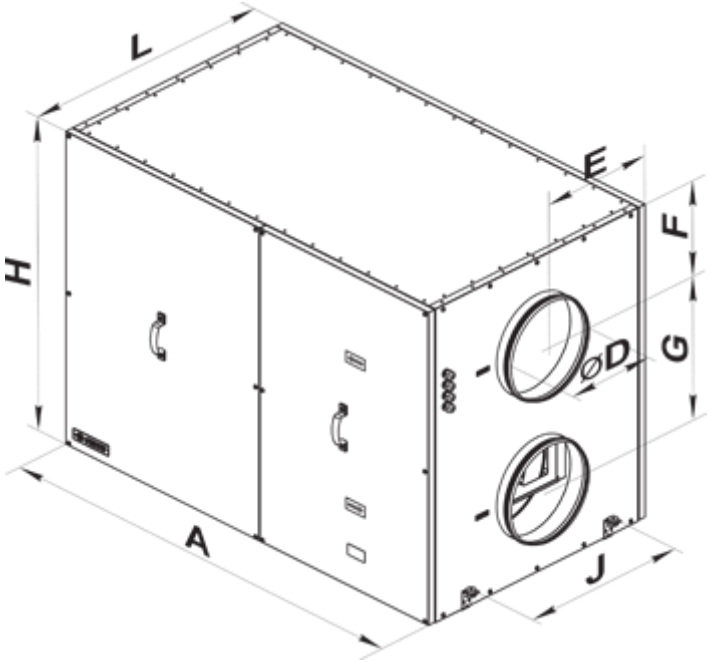


## Accessories

### Sensors

| Name | Photo | Description |
|---|---|---|
| HV2 |  | Humidity sensor |
| HR-S |  | Electro-mechanical humidistat |
| DPWC11200 |  | Humidity sensor |

### VOC sensors

| Name | Photo | Description |
|---|---|---|

| | | |
|---|---|---|
| DPWQ30600 |  | VOC sensors |
| DPWQ40200 |  | CO2 sensor |

### For round ducts

| Name | Photo | Description |
|---|---|---|
| KOM 315 |  | Backdraught damper with spring-loaded plates for shutting off air flow in round air ducts |
| KRV 315 |  | Air dampers for automatic air flow control in round ducts |

### Mixing chambers

| Name | Photo | Description |
|---|---|---|
| USWK 3/4-4 |  | The mixing unit USWK is designed for smooth heat medium flow control in ventilation systems equipped with water heaters or coolers for supply air temperature regulation |

### Electric actuators

| Name | Photo | Description |
|---|---|---|
| Belimo TF230 |  | The actuators are designed for controlling air dampers with cross section up to 0.4 m² performing protection functions |

### Other accessories

| Name | Photo | Description |
|---|---|---|
| SF 700x410x48 G4 |  | Panel filter G4 |
| PCOS004850 |  | The control module is designed for connection of the pCO series controllers (except for pCOB) to ventilation control systems in compliance with the Modbus RS485 protocol. |
| SFK 700x423x27 G4 |  | G4 pocket filter |