# VUT 800 EH



Horizontal air handling units with a crossflow heat exchanger

- Power of electrical reheater: 9000
- Sound pressure level LpA at 3 m: 48
- Heat exchanger type: Plate counterflow
- Heat exchanger material: Profiled polystyrene plates
- Supply filter: G4
- Extract filter: G4
- Sound-insulated casing
- Reheater: Electric
- Control: Remote Control
- Casing material: Galvanized steel

| | Unit of measurement | VUT 800 EH |
|---|---|---|
| Connected air duct size | mm | 249 |
| Phases | - | 1 |
| Maximum supply voltage | V | 230 |
| Minimum supply voltage | V | 230 |
| Power supply frequency | Hz | 50/60 |
| Rated power | W | 490 |
| Power of electrical reheater | W | 9000 |
| Unit current | A | 15.16 |
| Maximum airflow | $m^3/h$ | 800 |
| Rotation speed at 50hz | - | 1650 |
| Sound pressure level LpA at 3 m | dB(A) | 48 |
| Heat recovery efficiency, max | % | 78 |
| Heat exchanger type | - | Plate counterflow |
| Heat exchanger material | - | Profiled polystyrene plates |
| Weight | kg | 85 |
| Supply filter | - | G4 |
| Extract filter | - | G4 |
| Transported air temperature (max) | °C | 40 |
| Transported air temperature (min) | °C | -25 |
| Ambient air temperature min | °C | 1 |
| Ambient air temperature max | °C | 40 |

| | | |
|---|---|---|
| Ingress protection rating | - | IP22 |
| Ambient air humidity max | % | 80 |
| Ingress protection rating of the drive | - | IP44 |

## Dimensions

| ØD | B | B1 | B2 | B3 | H | H1 | H2 | H3 | L | L1 | L2 |
|---|---|---|---|---|---|---|---|---|---|---|---|
| 249 | 613 | 460 | 306 | 386 | 698 | 832 | 154 | 280 | 1071 | 1117 | 1171 |

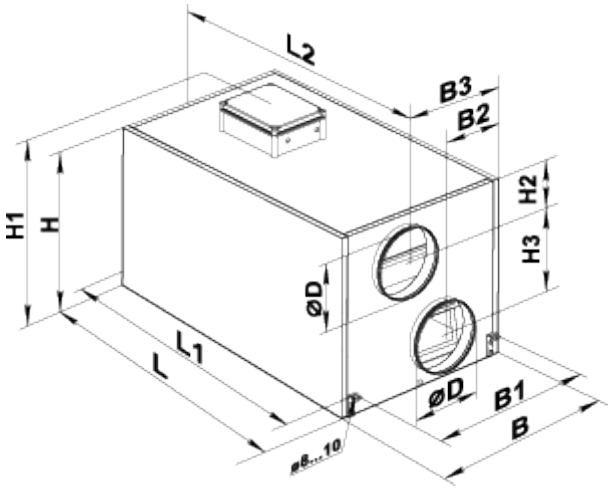


## Accessories

### For round ducts

| Name | Photo | Description |
|---|---|---|
| SR 250/600 |  | Silencers made of galvanized steel filled with non-combustible sound-absorbing material |
| SR 250/900 |  | Silencers made of galvanized steel filled with non-combustible sound-absorbing material |
| SR 250/1200 |  | Silencers made of galvanized steel filled with non-combustible sound-absorbing material |
| SRF 250/600 |  | Silencers made of aluminium alloy filled with non-combustible sound-absorbing material |
| SRF 250/900 |  | Silencers made of aluminium alloy filled with non-combustible sound-absorbing material |

| | | |
|---|---|---|
| SRF 250/2000 |  | Silencers made of aluminium alloy filled with non-combustible sound-absorbing material |

### For round ducts

| Name | Photo | Description |
|---|---|---|
| KOM 250 |  | Backdraught damper with spring-loaded plates for shutting off air flow in round air ducts |
| KR 250 |  | Air dampers for controlling air flow in round air ducts |

### Other accessories

| Name | Photo | Description |
|---|---|---|
| SF 550x253x48 G4 |  | Panel filter G4 |
| VL C4 300/300 | 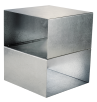 | Summer block |

## Ecodesign

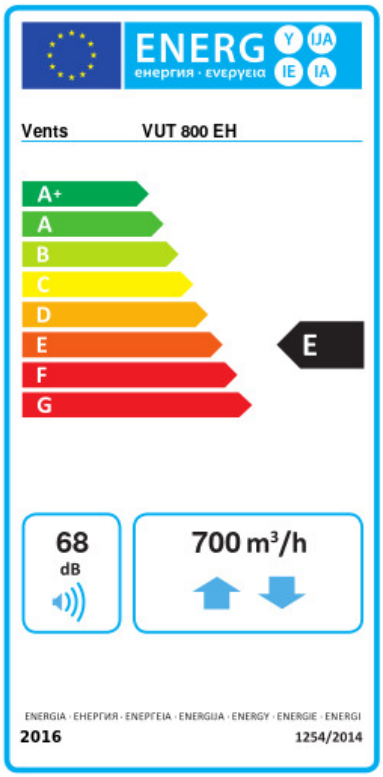


| Trademark | Vents | | | | | |
|---|---|---|---|---|---|---|
| Model | VUT 800 EH | | | | | |
| Specific energy consumption (SEC) (kWh/(m²/a)) | Cold | | Average | | Warm | |
| | -50.4 | A+ | -19.8 | E | 0.3 | G |
| Type of ventilation unit | Bidirectional | | | | | |
| Type of drive installed | Multi-speed | | | | | |
| Type of heat recovery system | Recuperative | | | | | |
| Thermal efficiency of heat recovery (%) | 64 | | | | | |
| Maximum flow rate (m³/h) | 700 | | | | | |
| Electric power input (W) | 490 | | | | | |
| Reference flow rate (m³/s) | 0.136 | | | | | |
| Reference pressure difference (Pa) | 50 | | | | | |
| Specific power input (SPI) (W/(m³/h)) | 0.551 | | | | | |
| Control typology | Manual control | | | | | |
| Maximum internal leakage rates (%) | 2.7 | | | | | |
| Maximum external leakage rates (%) | 2.7 | | | | | |
| Declared typology | RVU BVU | | | | | |
| Sound power level (dB(A)) | 68 | | | | | |
| The annual electricity consumption (AEC) (kWh/a) | Cold | | Average | | Warm | |
| | 1272 | | 735 | | 690 | |
| The annual heating saved (AHS) (kWh/a) | Cold | | Average | | Warm | |
| | 7343 | | 3754 | | 1697 | |