VUT 600 H



Horizontal air handling units with a crossflow heat exchanger

- Sound pressure level LpA at 3 m: 48
- Heat exchanger type: Plate counterflow
- Heat exchanger material: Profiled polystyrene plates
- Supply filter: G4
- Extract filter: G4
- Sound-insulated casing
- Control: Remote Control
- Casing material: Galvanized steel

	Unit of measurement	VUT 600 H
Connected air duct size	mm	249
Phases	-	1
Minimum supply voltage	V	230
Maximum supply voltage	V	230
Power supply frequency	Hz	50/60
Rated power	W	390
Unit current	A	1.72
Maximum airflow	m^3/h	600
Rotation speed at 50hz	-	1350
Sound pressure level LpA at 3 m	dB(A)	48
Heat recovery efficiency, max	%	85
Heat exchanger type	-	Plate counterflow
Heat exchanger material	-	Profiled polystyrene plates
Weight	kg	54
Supply filter	-	G4
Extract filter	-	G4
Transported air temperature (max)	°C	40
Transported air temperature (min)	°C	-25
Ambient air temperature min	°C	10
Ambient air temperature max	°C	50
Ingress protection rating	-	IP22

Ambient air humidity max	%	80
Ingress protection rating of the drive	-	IP44

Dimensions

ØD	B	B1	B2	B3	H	H1	H2	L	L1
199	416	300	54	207	603	230	148	722	768

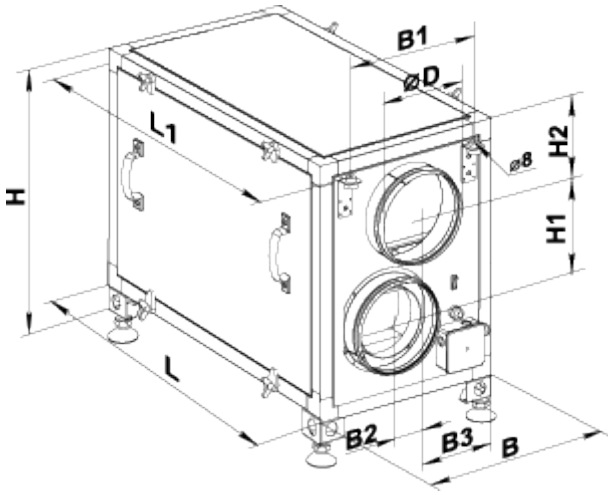

Accessories

For round ducts

Name	Photo	Description
SR 200/600		Silencers made of galvanized steel filled with non-combustible sound-absorbing material
SR 200/900		Silencers made of galvanized steel filled with non-combustible sound-absorbing material
SR 200/1200		Silencers made of galvanized steel filled with non-combustible sound-absorbing material
SRF 200/600		Silencers made of aluminium alloy filled with non-combustible sound-absorbing material
SRF 200/900		Silencers made of aluminium alloy filled with non-combustible sound-absorbing material
SRF 200/2000		Silencers made of aluminium alloy filled with non-combustible sound-absorbing material

For round ducts

Name	Photo	Description
KOM 200		Backdraught damper with spring-loaded plates for shutting off air flow in round air ducts
KR 200		Air dampers for controlling air flow in round air ducts

Other accessories

Name	Photo	Description
SF 378x210x48 G4		Panel filter G4
VL C4 300/384	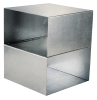	Summer block

Ecodesign

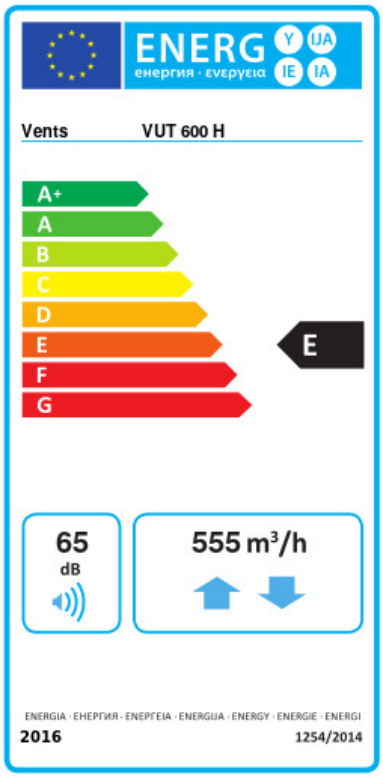

Trademark	Vents					
Model	VUT 600 H					
Specific energy consumption (SEC) (kWh/(m²/a))	Cold		Average		Warm	
	-46.5	A+	-15.9	E	4.2	G
Type of ventilation unit	Bidirectional					
Type of drive installed	Multi-speed					
Type of heat recovery system	Recuperative					
Thermal efficiency of heat recovery (%)	64					
Maximum flow rate (m³/h)	555					
Electric power input (W)	390					
Reference flow rate (m³/s)	0.108					
Reference pressure difference (Pa)	50					
Specific power input (SPI) (W/(m³/h))	0.618					
Control typology	Manual control					
Maximum internal leakage rates (%)	2.7					
Maximum external leakage rates (%)	2.7					
Declared typology	RVU BVU					
Sound power level (dB(A))	65					
The annual electricity consumption (AEC) (kWh/a)	Cold		Average		Warm	
	1428		891		846	
The annual heating saved (AHS) (kWh/a)	Cold		Average		Warm	
	7343		3754		1697	