VUT 300-2 E2V EC



Premium commercial vertical air handling units with a counterflow polystyrene heat exchanger

- Power of electrical reheater: 4000
- Sound pressure level LpA at 3 m: 37
- Heat exchanger type: Counter flow
- Heat exchanger material: Polystyrene
- Supply filter: G4 (F7 option)
- Extract filter: G4
- Reheater: Electric
- Control: Remote Control
- Casing material: Aluzinc

	Unit of measurement	VUT 300-2 E2V EC
Connected air duct size	mm	160
Phases	-	1
Maximum supply voltage	V	230
Minimum supply voltage	V	230
Power supply frequency	Hz	50
Rated power	W	212
Power of electrical reheater	W	4000
Unit current	A	18.8
Maximum airflow	m³/h	300
Sound pressure level LpA at 3 m	dB(A)	37
Heat recovery efficiency, max	%	95
Heat exchanger type	-	Counter flow
Heat exchanger material	-	Polystyrene
Weight	kg	38
Supply filter	-	G4 (F7 option)
Extract filter	-	G4
Transported air temperature (max)	°C	60
Transported air temperature (min)	°C	-39
Ambient air temperature min	°C	1
Ambient air temperature max	°C	40
Ingress protection rating	-	IP22

Ambient air humidity max	%	80
Ingress protection rating of the drive	-	IP44

Dimensions

ØD	A1
160	403

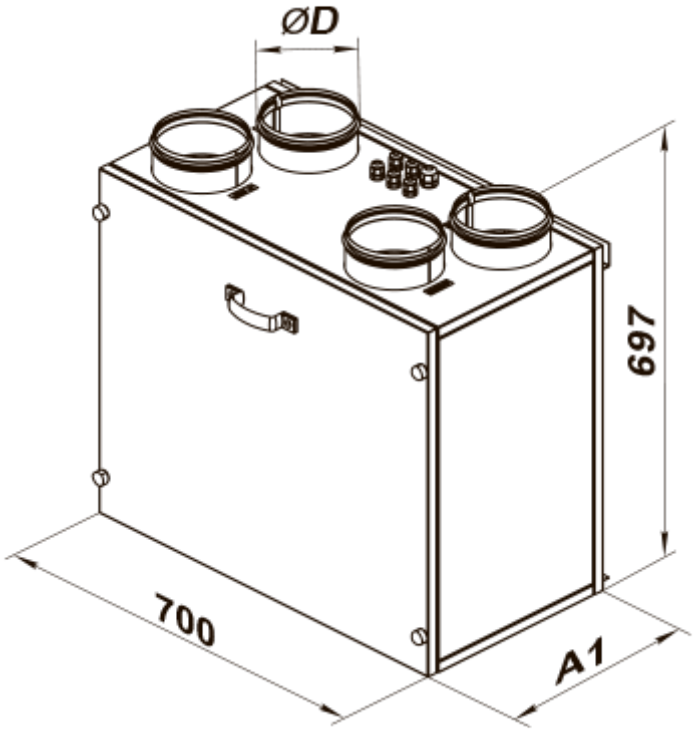

Accessories

Sensors

Name	Photo	Description
CO2-1		CO2 sensors
CO2-2		CO2 sensors

For round ducts

Name	Photo	Description
SR 160/600		Silencers made of galvanized steel filled with non-combustible sound-absorbing material

SR 160/900		Silencers made of galvanized steel filled with non-combustible sound-absorbing material
SR 160/1200		Silencers made of galvanized steel filled with non-combustible sound-absorbing material
SRF 160/600		Silencers made of aluminium alloy filled with non-combustible sound-absorbing material
SRF 160/900		Silencers made of aluminium alloy filled with non-combustible sound-absorbing material
SRF 160/2000		Silencers made of aluminium alloy filled with non-combustible sound-absorbing material

For round ducts

Name	Photo	Description
KOM 160		Backdraught damper with spring-loaded plates for shutting off air flow in round air ducts
KOMu 160		Backdraught damper with spring-loaded plates for shutting off air flow in round air ducts

Electric actuators

Name	Photo	Description
Belimo TF24		The actuators are designed for controlling air dampers with cross section up to 0.4 m² performing protection functions
Belimo TF230		The actuators are designed for controlling air dampers with cross section up to 0.4 m² performing protection functions
Belimo LF24		The Belimo LF series actuators are designed for controlling air dampers with cross section up to 0.8 m² performing protection functions
Belimo LF230		The Belimo LF series actuators are designed for controlling air dampers with cross section up to 0.8 m² performing protection functions

Fittings

Name	Photo	Description

C 160		The clamps are designed for quick and reliable mounting and connection of various round ventilation system components. Clamps are made of stainless steel band

Ecodesign

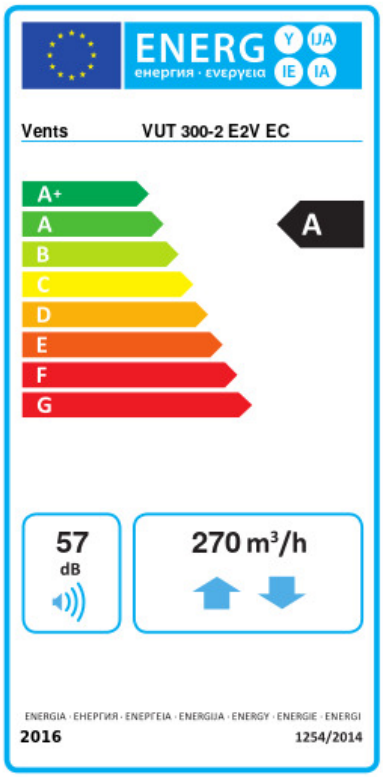

Trademark	Vents					
Model	VUT 300-2 E2V EC					
Specific energy consumption (SEC) (kWh/(m²/a))	Cold		Average		Warm	
	-78.6	A+	-39.3	A	-14.1	E
Type of ventilation unit	Bidirectional					
Type of drive installed	Variable speed					
Type of heat recovery system	Recuperative					
Thermal efficiency of heat recovery (%)	89					
Maximum flow rate (m³/h)	270					
Electric power input (W)	205					
Reference flow rate (m³/s)	0.053					
Reference pressure difference (Pa)	50					
Specific power input (SPI) (W/(m³/h))	0.529					
Control typology	Local demand control					
Maximum internal leakage rates (%)	2.7					
Maximum external leakage rates (%)	2.7					
Declared typology	RVU BVU					
Sound power level (dB(A))	57					
The annual electricity consumption (AEC) (kWh/a)	Cold		Average		Warm	
	862		325		280	
The annual heating saved (AHS) (kWh/a)	Cold		Average		Warm	
	9141		4673		2113	