VUT 250 V mini A12

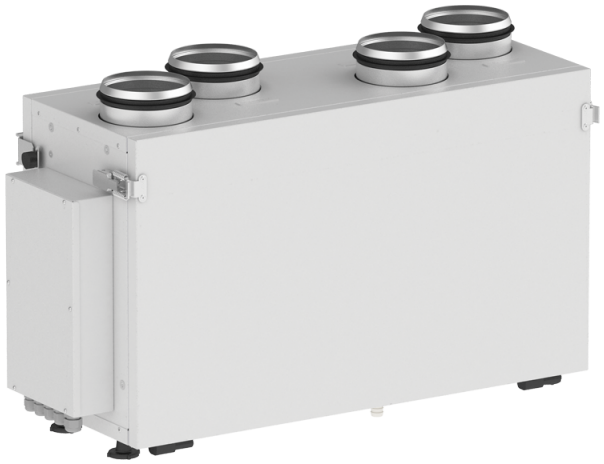

Vertical air handling units with a crossflow enthalpy heat exchanger

- Sound pressure level LpA at 3 m: 47
- Heat exchanger type: Plate counterflow
- Heat exchanger material: Profiled polystyrene plates
- Supply filter: G4 (F8 PM2.5 81 %- option)
- Extract filter: G4
- Sound-insulated casing
- Control: Remote Control
- Casing material: Galvanized steel

	Unit of measurement	VUT 250 V mini A12
Connected air duct size	mm	125
Phases	-	1
Minimum supply voltage	V	230
Maximum supply voltage	V	230
Power supply frequency	Hz	50/60
Rated power	W	126
Unit current	A	0.6
Maximum airflow	m^3/h	260
Rotation speed at 50hz	-	2700
Sound pressure level LpA at 3 m	dB(A)	47
Heat recovery efficiency, max	%	78
Heat exchanger type	-	Plate counterflow
Heat exchanger material	-	Profiled polystyrene plates
Weight	kg	26
Supply filter	-	G4 (F8 PM2.5 81 %- option)
Extract filter	-	G4
Transported air temperature (max)	°C	40
Transported air temperature (min)	°C	-25
Ambient air temperature min	°C	1
Ambient air temperature max	°C	40
Ingress protection rating	-	IP22

Ambient air humidity max	%	80
Ingress protection rating of the drive	-	IP44

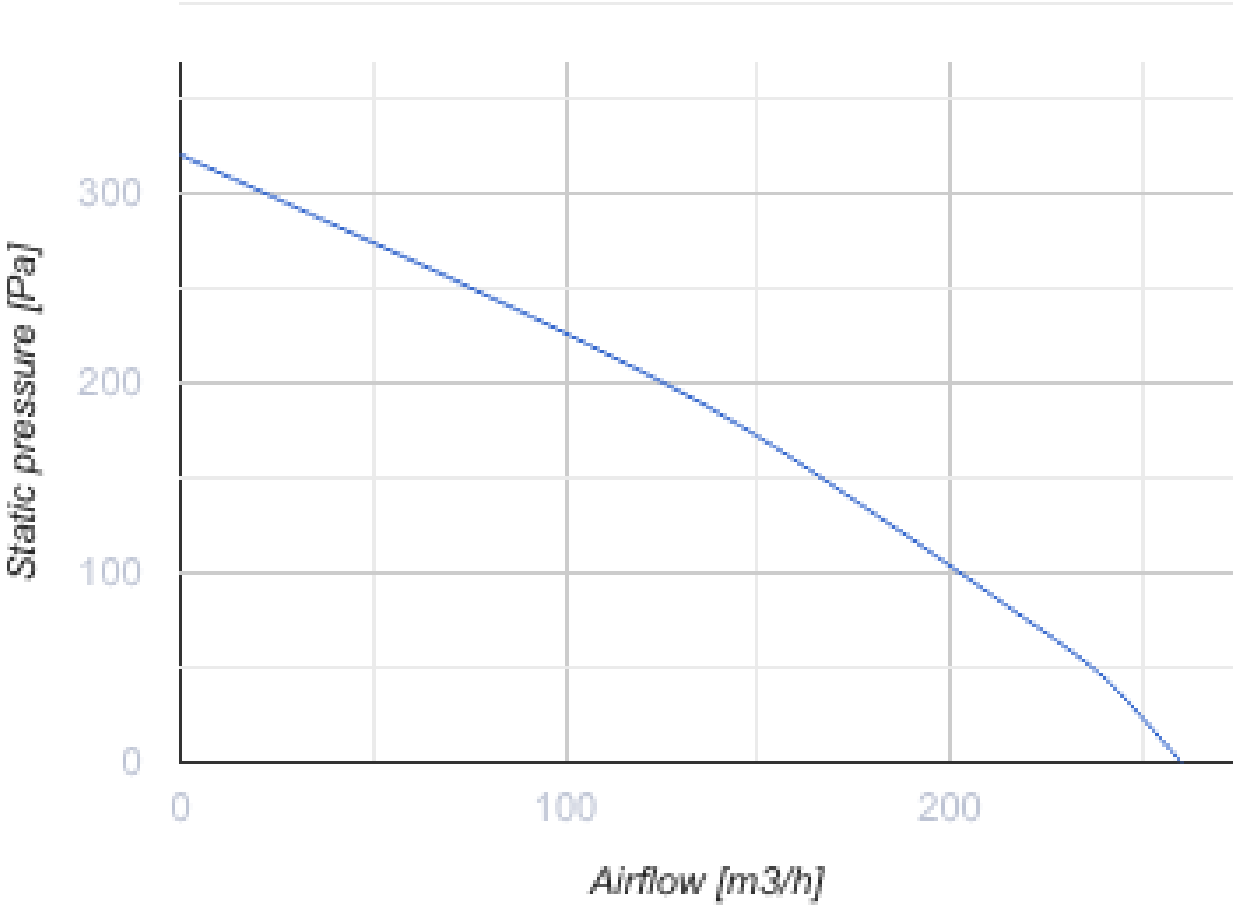

Dimensions

ØD	B	H	H1	L	L1
125	300	443	490	713	43

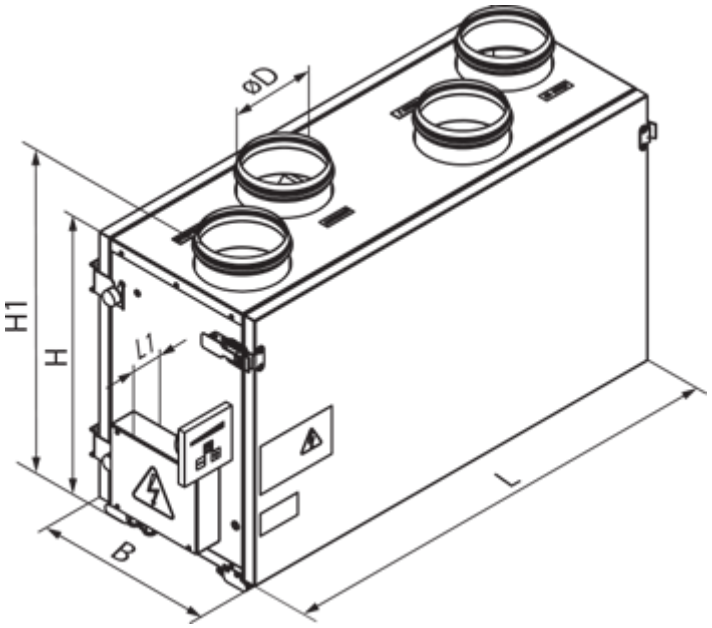

Accessories

For round ducts

Name	Photo	Description
SR 125/600		Silencers made of galvanized steel filled with non-combustible sound-absorbing material
SR 125/900		Silencers made of galvanized steel filled with non-combustible sound-absorbing material
SR 125/1200		Silencers made of galvanized steel filled with non-combustible sound-absorbing material
SRF 125/600		Silencers made of aluminium alloy filled with non-combustible sound-absorbing material
SRF 125/900		Silencers made of aluminium alloy filled with non-combustible sound-absorbing material
SRF 125/2000		Silencers made of aluminium alloy filled with non-combustible sound-absorbing material

For round ducts

Name	Photo	Description
KOM 125		Backdraught damper with spring-loaded plates for shutting off air flow in round air ducts

KR 125		Air dampers for controlling air flow in round air ducts

Other accessories

Name	Photo	Description
SF 240x184x40 G4		Panel filter G4
SF 240x184x40 F8		F8 panel filter

Ecodesign

Trademark	Vents					
Model	VUT 250 V mini A12					
Specific energy consumption (SEC) (kWh/(m²/a))	Cold		Average		Warm	
	-53	A+	-22.7	D	-2.6	F
Type of ventilation unit	Bidirectional					
Type of drive installed	Variable speed					
Type of heat recovery system	Recuperative					
Thermal efficiency of heat recovery (%)	57					
Maximum flow rate (m³/h)	240					
Electric power input (W)	170					
Reference flow rate (m³/s)	0.056					
Reference pressure difference (Pa)	50					
Specific power input (SPI) (W/(m³/h))	0.63					
Control typology	Central demand control					
Maximum internal leakage rates (%)	2.7					
Maximum external leakage rates (%)	2.7					
Declared typology	RVU BVU					
Sound power level (dB(A))	47					
The annual electricity consumption (AEC) (kWh/a)	Cold		Average		Warm	
	1152		615		570	
The annual heating saved (AHS) (kWh/a)	Cold		Average		Warm	
	7309		3736		1689	