VUT 2000 EH



Horizontal air handling units with a crossflow heat exchanger

- Power of electrical reheater: 18000
- Sound pressure level LpA at 3 m: 65
- Heat exchanger type: Plate counterflow
- Heat exchanger material: Profiled polystyrene plates
- Supply filter: G4
- Extract filter: G4
- Sound-insulated casing
- Reheater: Electric
- Control: Remote Control
- Casing material: Galvanized steel

	Unit of measurement	VUT 2000 EH
Connected air duct size	mm	315
Phases	-	1
Minimum supply voltage	V	230
Maximum supply voltage	V	230
Power supply frequency	Hz	50/60
Rated power	W	1300
Power of electrical reheater	W	18000
Unit current	A	31.7
Maximum airflow	m^3/h	2200
Rotation speed at 50hz	-	1150
Sound pressure level LpA at 3 m	dB(A)	65
Heat recovery efficiency, max	%	77
Heat exchanger type	-	Plate counterflow
Heat exchanger material	-	Profiled polystyrene plates
Weight	kg	96
Supply filter	-	G4
Extract filter	-	G4
Transported air temperature (max)	°C	40
Transported air temperature (min)	°C	-25
Ambient air temperature max	°C	40
Ambient air temperature min	°C	1

Ingress protection rating	-	IP22
Ambient air humidity max	%	80
Ingress protection rating of the drive	-	IP44

Dimensions

ØD	B	B1	B2	B3	H	H1	H2	H3	L	L1	L2
314	842	581	320	520	814	947	201	595	1345	1388	1445

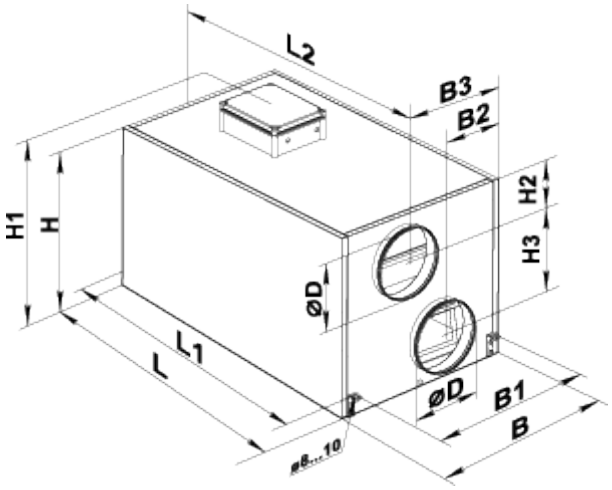

Accessories

For round ducts

Name	Photo	Description
SR 315/600		Silencers made of galvanized steel filled with non-combustible sound-absorbing material
SR 315/900		Silencers made of galvanized steel filled with non-combustible sound-absorbing material
SR 315/1200		Silencers made of galvanized steel filled with non-combustible sound-absorbing material
SRF 315/600		Silencers made of aluminium alloy filled with non-combustible sound-absorbing material
SRF 315/900		Silencers made of aluminium alloy filled with non-combustible sound-absorbing material

SRF 315/2000		Silencers made of aluminium alloy filled with non-combustible sound-absorbing material

For round ducts

Name	Photo	Description
KOM 315		Backdraught damper with spring-loaded plates for shutting off air flow in round air ducts
KR 315		Air dampers for controlling air flow in round air ducts

Other accessories

Name	Photo	Description
SF 780x273x48 G4		Panel filter G4
VL C4 300/384	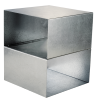	Summer block

Ecodesign

Trademark	Vents
Model	VUT 2000 EH
Type of drive installed	Integrated MSD
Type of heat recovery system	Recuperative
Thermal efficiency of heat recovery (%)	67
Nominal external pressure (Pa)	293
Maximum internal leakage rates (%)	2.7
Maximum external leakage rates (%)	2.7
Static efficiency (%)	32.4
Visual filter warning	See control panel catalogue data
Declared typology	NRVU BVU
Effective electric power input (kW)	0.592
Face velocity at design flow rate (m/s)	1.233
Energy performance of filters	B
Sound power level (dB(A))	85