VUT 1000 WH-4



Horizontal air handling units with a crossflow heat exchanger

- Sound pressure level LpA at 3 m: 60
- Heat exchanger type: Plate counterflow
- Heat exchanger material: Profiled polystyrene plates
- Supply filter: G4
- Extract filter: G4
- Sound-insulated casing
- Reheater: Water
- Control: Remote Control
- Casing material: Galvanized steel

	Unit of measurement	VUT 1000 WH-4
Connected air duct size	mm	249
Phases	-	1
Minimum supply voltage	V	230
Maximum supply voltage	V	230
Power supply frequency	Hz	50/60
Rated power	W	820
Unit current	A	3.2
Maximum airflow	m^3/h	1100
Rotation speed at 50hz	-	1850
Sound pressure level LpA at 3 m	dB(A)	60
Heat recovery efficiency, max	%	78
Heat exchanger type	-	Plate counterflow
Heat exchanger material	-	Profiled polystyrene plates
Weight	kg	85
Supply filter	-	G4
Extract filter	-	G4
Transported air temperature (max)	°C	40
Transported air temperature (min)	°C	-25
Ambient air temperature min	°C	1
Ambient air temperature max	°C	40
Ingress protection rating	-	IP22

Ambient air humidity max	%	80
Ingress protection rating of the drive	-	IP44

Dimensions

ØD	B	B1	B2	B3	H	H1	H2	H3	L	L1	L2
249	613	460	306	386	698	832	154	280	1071	1117	1171

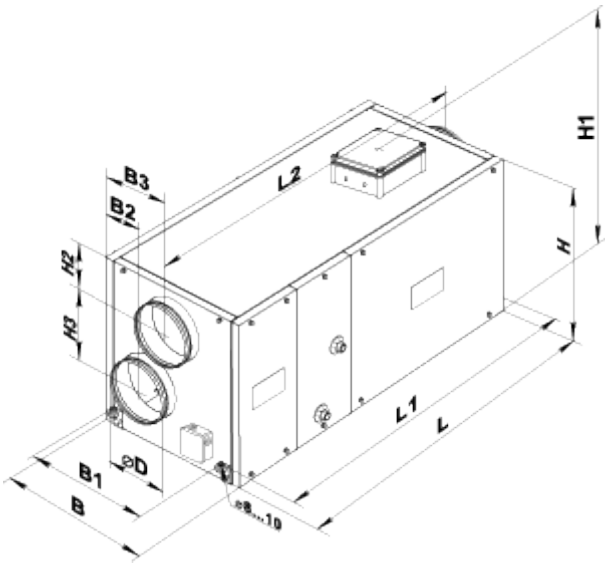

Accessories

For round ducts

Name	Photo	Description
SR 315/600		Silencers made of galvanized steel filled with non-combustible sound-absorbing material
SR 315/900		Silencers made of galvanized steel filled with non-combustible sound-absorbing material
SR 315/1200		Silencers made of galvanized steel filled with non-combustible sound-absorbing material
SRF 315/600		Silencers made of aluminium alloy filled with non-combustible sound-absorbing material
SRF 315/900		Silencers made of aluminium alloy filled with non-combustible sound-absorbing material

SRF 315/2000		Silencers made of aluminium alloy filled with non-combustible sound-absorbing material

For round ducts

Name	Photo	Description
KOM 315		Backdraught damper with spring-loaded plates for shutting off air flow in round air ducts
KR 315		Air dampers for controlling air flow in round air ducts

Other accessories

Name	Photo	Description
SF 780x273x48 G4		Panel filter G4
VL C4 300/384	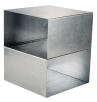	Summer block

Ecodesign

Trademark	Vents
Model	VUT 1000 WH-4
Type of drive installed	Integrated MSD
Type of heat recovery system	Recuperative
Thermal efficiency of heat recovery (%)	70
Nominal external pressure (Pa)	342
Maximum internal leakage rates (%)	2.7
Maximum external leakage rates (%)	2.7
Static efficiency (%)	22.3
Visual filter warning	See control panel catalogue data
Declared typology	NRVU BVU
Effective electric power input (kW)	0.769
Face velocity at design flow rate (m/s)	1.174
Energy performance of filters	B
Sound power level (dB(A))	80