VUT 1000 PE EC



Ceiling mounted air handling units in compact heat and sound-insulated casing with electic heater

- Power of electrical reheater: 3300
- Sound pressure level LpA at 3 m: 52
- Heat exchanger type: Counter flow
- Heat exchanger material: Aluminum
- Supply filter: G4
- Extract filter: G4
- Reheater: Electric
- Control: Remote Control
- Casing material: Aluzinc

	Unit of measurement	VUT 1000 PE EC
Connected air duct size	mm	250
Phases	-	1
Minimum supply voltage	V	230
Maximum supply voltage	V	230
Power supply frequency	Hz	50/60
Rated power	W	400
Power of electrical reheater	W	3300
Unit current	A	16.56
Maximum airflow	m³/h	1100
Sound pressure level LpA at 3 m	dB(A)	52
Heat recovery efficiency, max	%	90
Heat exchanger type	-	Counter flow
Heat exchanger material	-	Aluminum
Weight	kg	95
Supply filter	-	G4
Extract filter	-	G4
Transported air temperature (max)	°C	40
Transported air temperature (min)	°C	-25
Ambient air temperature min	°C	1
Ambient air temperature max	°C	40

Dimensions

ØD	B	B1	B2	B3	B4	H	H1	L	L1
250	1351	1216	608	431	655	318	143	1349	1402

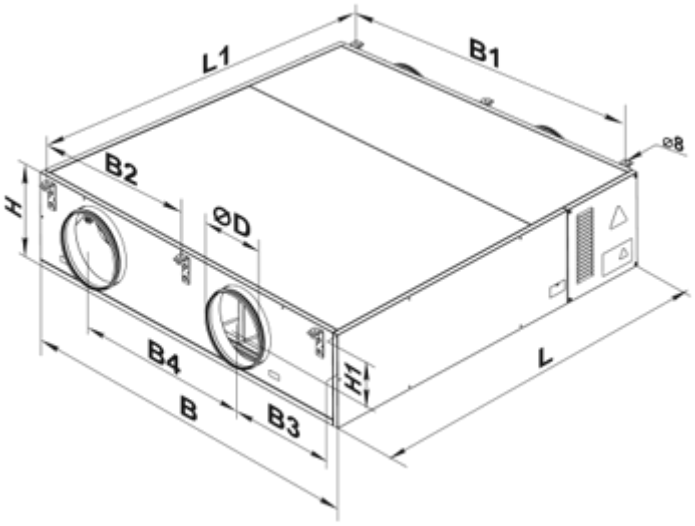

Accessories

For round ducts

Name	Photo	Description
SR 250/600		Silencers made of galvanized steel filled with non-combustible sound-absorbing material
SR 250/900		Silencers made of galvanized steel filled with non-combustible sound-absorbing material
SR 250/1200		Silencers made of galvanized steel filled with non-combustible sound-absorbing material
SRF 250/600		Silencers made of aluminium alloy filled with non-combustible sound-absorbing material
SRF 250/900		Silencers made of aluminium alloy filled with non-combustible sound-absorbing material

For round ducts

Name	Photo	Description
KOM 250		Backdraught damper with spring-loaded plates for shutting off air flow in round air ducts

KRV 250		Air dampers for automatic air flow control in round ducts

Electric actuators

Name	Photo	Description
Belimo TF230		The actuators are designed for controlling air dampers with cross section up to 0.4 m² performing protection functions
Belimo LF230		The Belimo LF series actuators are designed for controlling air dampers with cross section up to 0.8 m² performing protection functions

Other accessories

Name	Photo	Description
SF 647x274x20 G4		Panel filter G4
SFK 647x274x27 F7		F7 pocket filter
SFK 647x274x27 G4		G4 pocket filter

Fittings

Name	Photo	Description
C 250		The clamps are designed for quick and reliable mounting and connection of various round ventilation system components. Clamps are made of stainless steel band

Ecodesign

Trademark	Vents
Model	VUT 1000 PE EC
Type of drive installed	Integrated VSD
Type of heat recovery system	Recuperative
Thermal efficiency of heat recovery (%)	81
Nominal external pressure (Pa)	314
Maximum internal leakage rates (%)	2.7
Maximum external leakage rates (%)	2.7
Static efficiency (%)	59.9
Visual filter warning	See control panel catalogue data
Declared typology	NRVU BVU
Effective electric power input (kW)	0.379
Face velocity at design flow rate (m/s)	1.111
Energy performance of filters	B
Sound power level (dB(A))	72