VUE 700 HBE EC A21

Horizontal air handling units with a counterflow polystyrene or enthalpy heat exchanger



- Power of electrical reheater: 3600
- Sound pressure level LpA at 3 m: 31
- Heat exchanger type: Counter flow
- Heat exchanger material: Enthalpy
- Supply filter: G4+F7
- Extract filter: G4
- Sound-insulated casing
- Enthalpy heat exchanger
- Bypass: Auto
- Reheater: Electric
- Preheater: Optional
- BMS protocol: ModBus
- Control: Smartphone
- Casing material: Galvanized steel
- Humidity sensor: Optional
- CO2 sensor: Optional
- PM2.5 sensor: Optional

	Unit of measurement	VUE 700 HBE EC A21
Connected air duct size	mm	250
Phases	-	1
Minimum supply voltage	V	230
Maximum supply voltage	V	230
Power supply frequency	Hz	50/60
Rated power	W	336
Power of electrical reheater	W	3600
Unit current	A	18
Maximum airflow	m^3/h	830
Rotation speed at 50hz	-	3200
Sound pressure level LpA at 3 m	dB(A)	31
Heat recovery efficiency, max	%	89
Heat exchanger type	-	Counter flow
Heat exchanger material	-	Enthalpy
Weight	kg	108.4
Supply filter	-	G4+F7
Extract filter	-	G4
Transported air temperature (max)	°C	40
Transported air temperature (min)	°C	-25
Ambient air temperature min	°C	1
Ambient air temperature max	°C	40

Ingress protection rating	-	IP22
Ambient air humidity max	%	80
Ingress protection rating of the drive	-	IP44

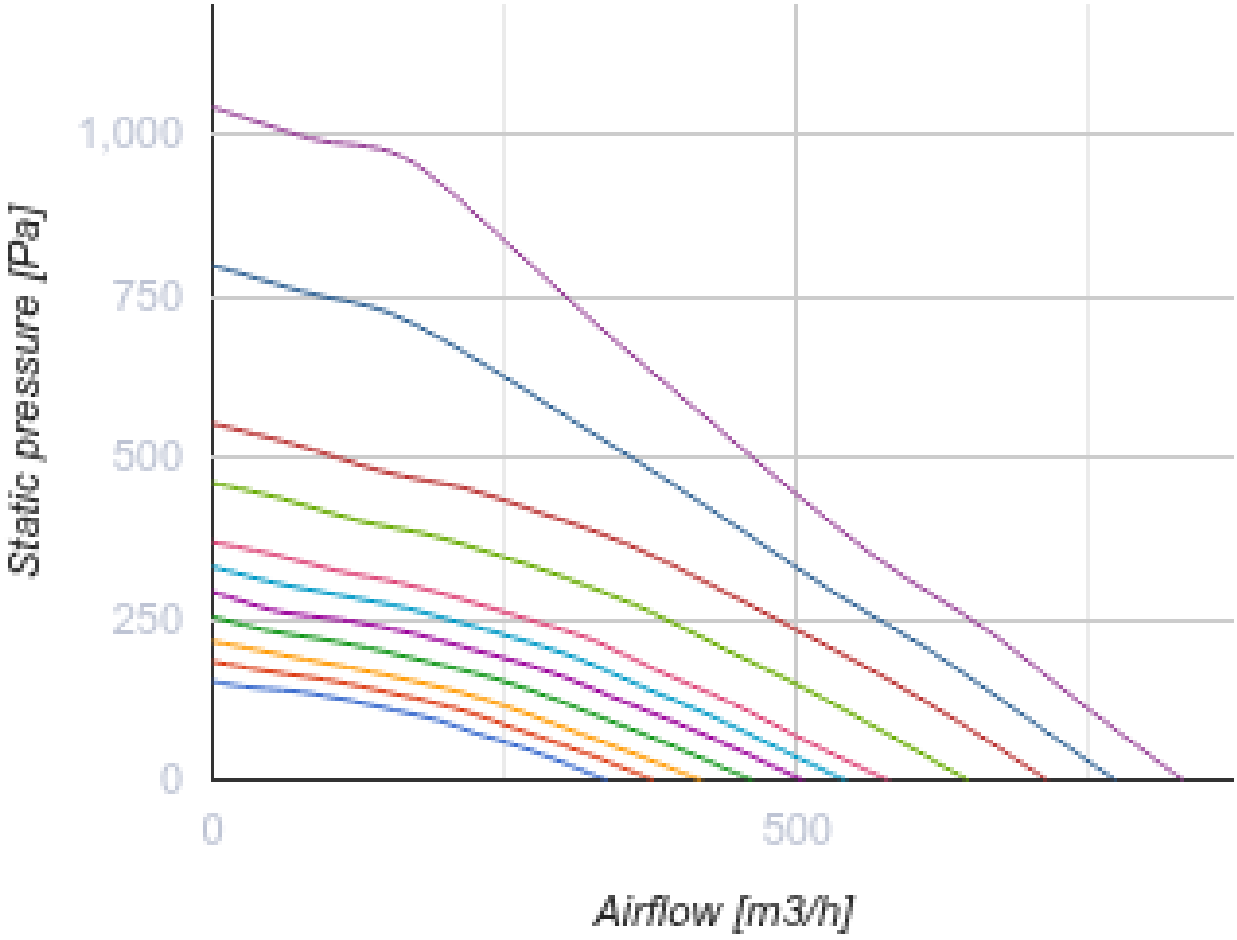

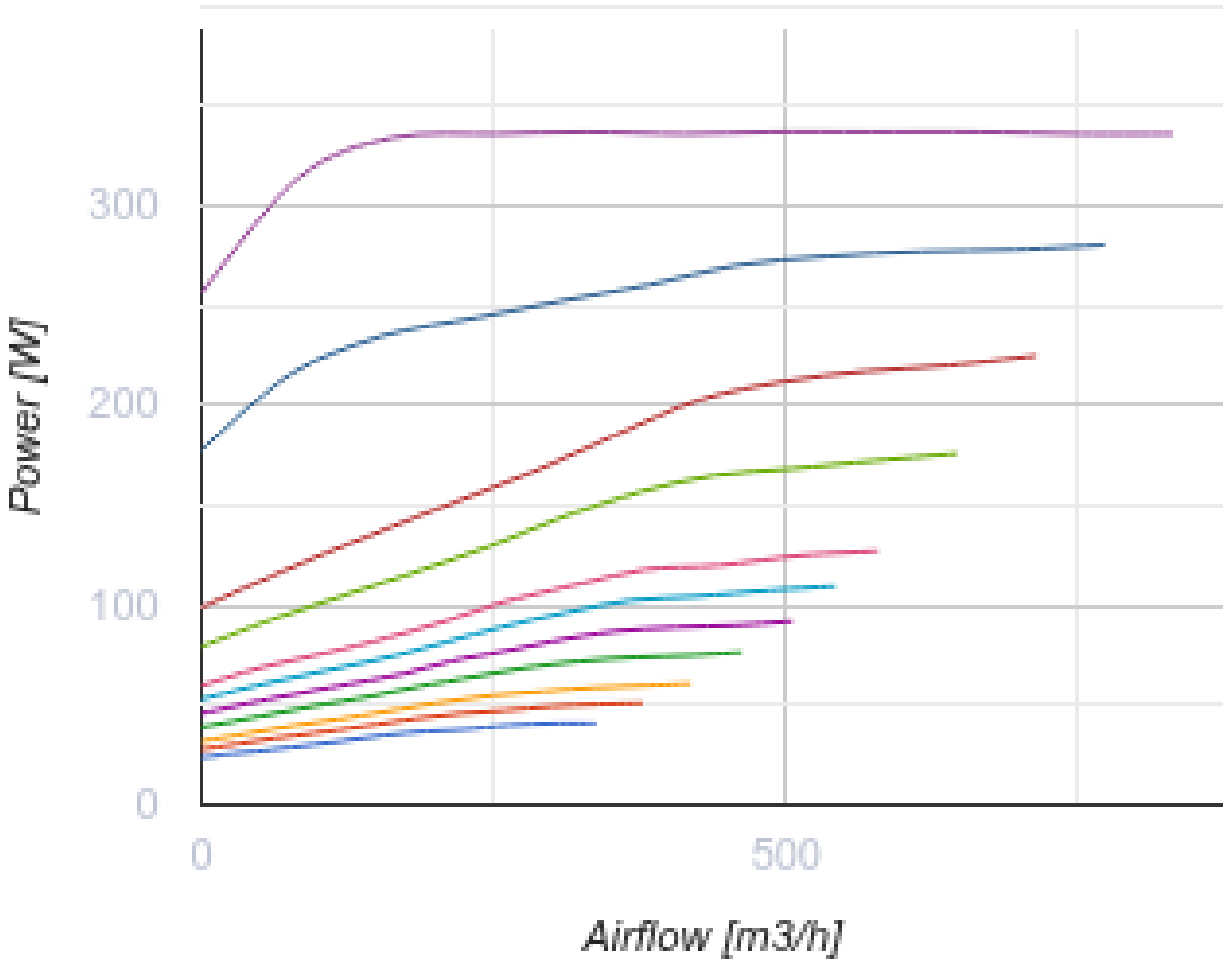

Dimensions

ØD	B	B1	B2	H	H1	H2	L	L1
247	866	274	296	601	234	166	1282	1379

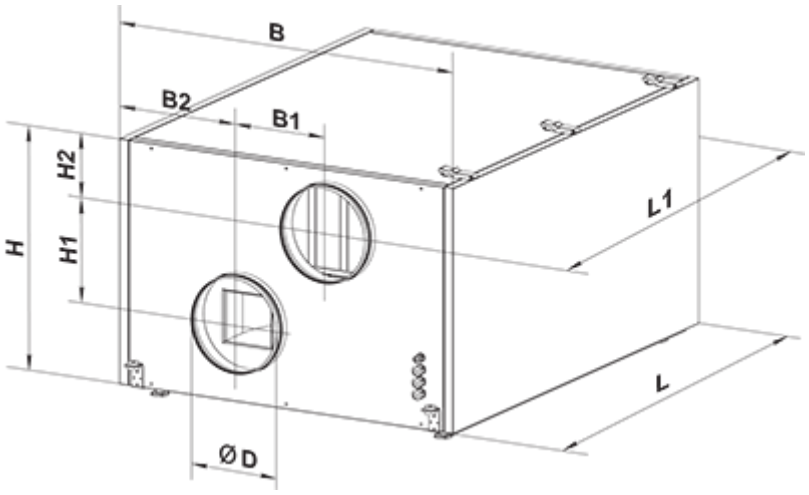

Accessories

Control Panels for AHU

Name	Photo	Description
A25		Touch screen control panel for controlling industrial and residential air handling units
A22		Control panels for controlling industrial and residential air handling units
A22 WiFi		Control panels for controlling industrial and residential air handling units

Sensors

Name	Photo	Description
HV2		Humidity sensor
CO2-1		CO2 sensors
CO2-2		CO2 sensors
HR-S		Electro-mechanical humidistat

Electrical heaters

Name	Photo	Description

NKP 250-1,2-1 A21 V.2		Inline heaters for heat exchanger frost protection
NKP 250-2,0-1 A21 V.2		Inline heaters for heat exchanger frost protection
NKP 250-3,0-1 A21 V.2		Inline heaters for heat exchanger frost protection

For round ducts

Name	Photo	Description
SR 250/600		Silencers made of galvanized steel filled with non-combustible sound-absorbing material
SR 250/900		Silencers made of galvanized steel filled with non-combustible sound-absorbing material
SR 250/1200		Silencers made of galvanized steel filled with non-combustible sound-absorbing material

For round ducts

Name	Photo	Description
KOM 250		Backdraught damper with spring-loaded plates for shutting off air flow in round air ducts
KRV 250		Air dampers for automatic air flow control in round ducts

Electric actuators

Name	Photo	Description
Belimo TF230		The actuators are designed for controlling air dampers with cross section up to 0.4 m² performing protection functions

Other accessories

Name	Photo	Description
SF 784x253x48 G4		Panel filter G4

SF 784x253x48 F7		F7 panel filter

Ecodesign

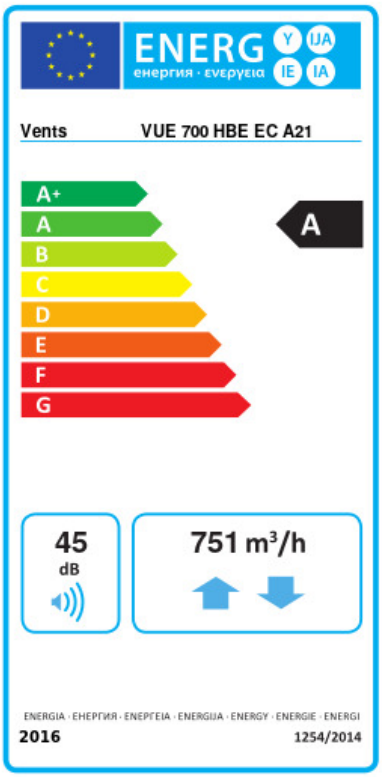

Trademark	Vents					
Model	VUE 700 HBE EC A21					
Specific energy consumption (SEC) (kWh/(m²/a))	Cold		Average		Warm	
	-77.9	A+	-40.8	A	-16.9	E
Type of ventilation unit	Bidirectional					
Type of drive installed	Variable speed					
Type of heat recovery system	Recuperative					
Thermal efficiency of heat recovery (%)	78					
Maximum flow rate (m³/h)	751					
Electric power input (W)	336					
Reference flow rate (m³/s)	0.143					
Reference pressure difference (Pa)	50					
Specific power input (SPI) (W/(m³/h))	0.243					
Control typology	Local demand control					
Maximum internal leakage rates (%)	2.7					
Maximum external leakage rates (%)	2.7					
Declared typology	RVU BVU					
Sound power level (dB(A))	45					
The annual electricity consumption (AEC) (kWh/a)	Cold		Average		Warm	
	710		173		128	
The annual heating saved (AHS) (kWh/a)	Cold		Average		Warm	
	8695		4445		2010	