VUE 550 PBW EC L A21 DTV



Suspended air handling units with a counterflow polystyrene or enthalpy heat exchanger

- Sound pressure level LpA at 3 m: 30
- Heat exchanger type: Counter flow
- Heat exchanger material: Enthalpy
- Supply filter: G4 (F7 option)
- Extract filter: G4
- Sound-insulated casing
- Enthalpy heat exchanger
- Bypass: Auto
- Reheater: Water
- Preheater: Optional
- BMS protocol: ModBus
- Control: Smartphone
- Casing material: Galvanized steel
- Humidity sensor: Optional
- CO2 sensor: Optional
- PM2.5 sensor: Optional

	Unit of measurement	VUE 550 PBW EC L A21 DTV
Connected air duct size	mm	200
Phases	-	1
Minimum supply voltage	V	230
Maximum supply voltage	V	230
Power supply frequency	Hz	50/60
Rated power	W	322
Unit current	A	2.4
Maximum airflow	m^3/h	608
Rotation speed at 50hz	-	3100
Sound pressure level LpA at 3 m	dB(A)	30
Heat recovery efficiency, max	%	87
Heat exchanger type	-	Counter flow
Heat exchanger material	-	Enthalpy
Weight	kg	68
Supply filter	-	G4 (F7 option)
Extract filter	-	G4
Transported air temperature (max)	°C	40
Transported air temperature (min)	°C	-25
Ambient air temperature min	°C	1

Ambient air temperature max	°C	40
Ingress protection rating	-	IP22
Ambient air humidity max	%	60
Ingress protection rating of the drive	-	IP44

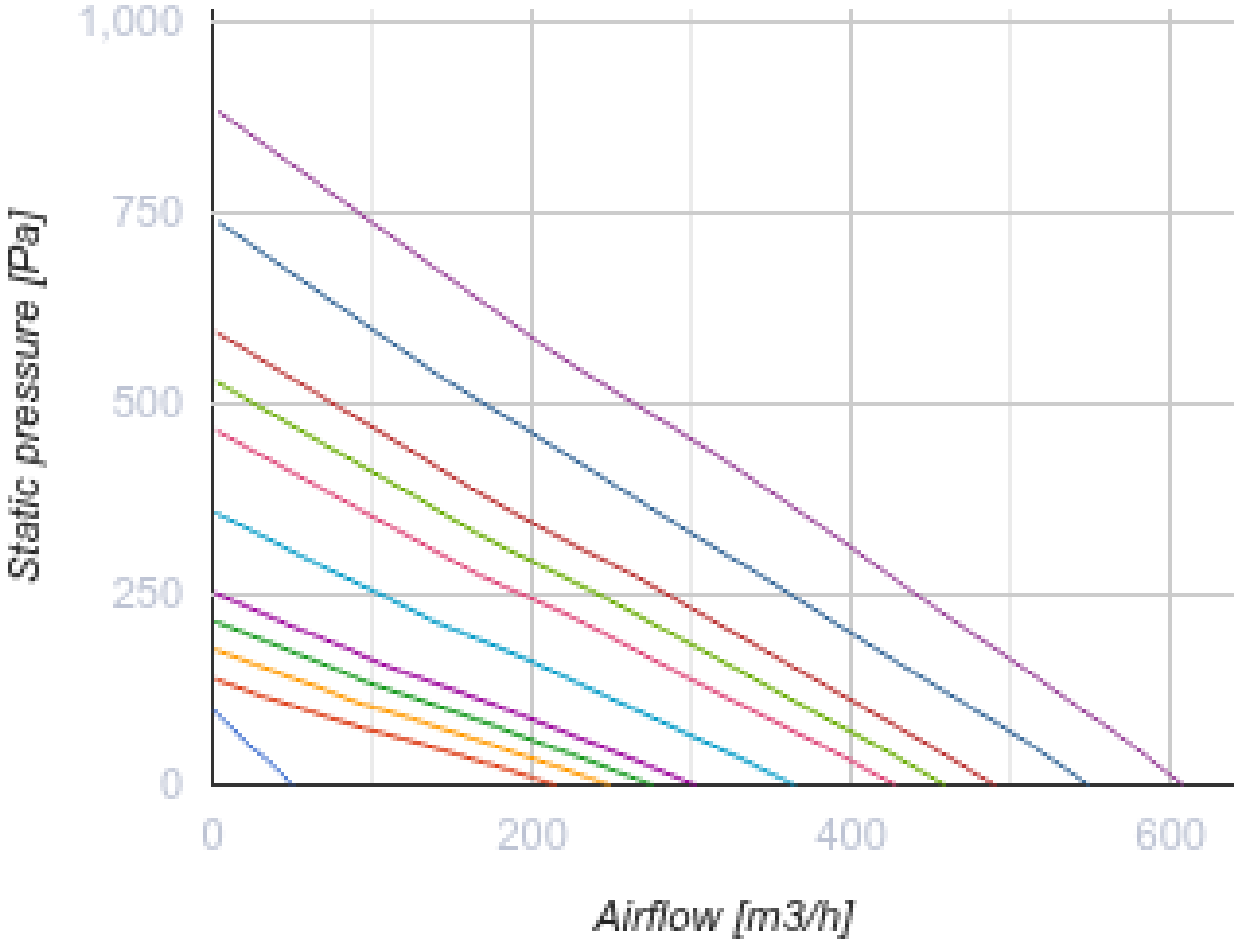

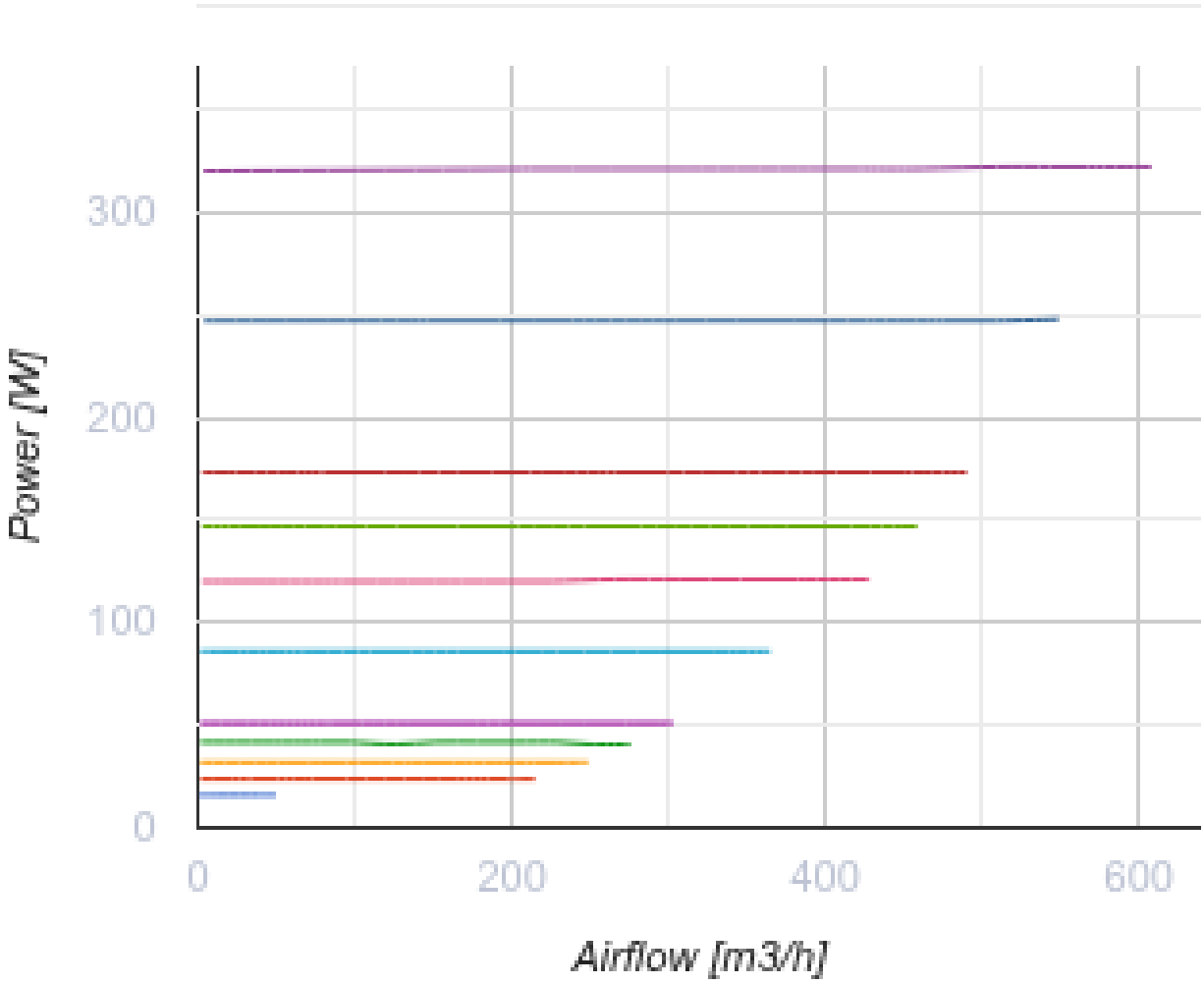

Dimensions

ØD	B	B1	H	L	L1
200	827	960	280	1238	1291

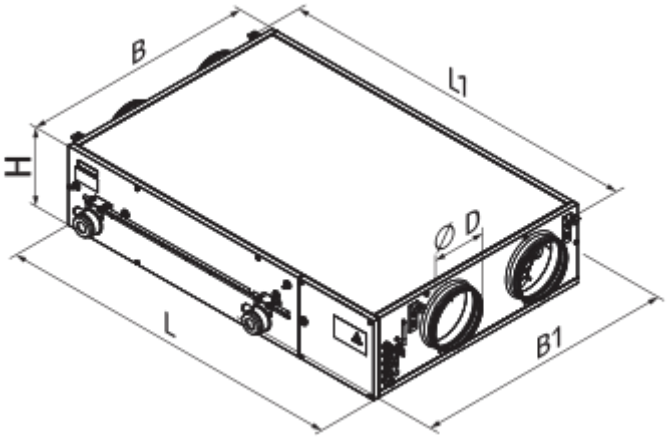

Accessories

Control Panels for AHU

Name	Photo	Description
A25		Touch screen control panel for controlling industrial and residential air handling units
A22		Control panels for controlling industrial and residential air handling units
A22 WiFi		Control panels for controlling industrial and residential air handling units

Sensors

Name	Photo	Description
HV2		Humidity sensor
CO2-1		CO2 sensors
CO2-2		CO2 sensors
HR-S		Electro-mechanical humidistat

Electrical heaters

Name	Photo	Description

NKP 200-1,2-1 A21 V.2		Inline heaters for heat exchanger frost protection
NKP 200-1,7-1 A21 V.2		Inline heaters for heat exchanger frost protection
NKP 200-2,0-1 A21 V.2		Inline heaters for heat exchanger frost protection

For round ducts

Name	Photo	Description
SR 200/600		Silencers made of galvanized steel filled with non-combustible sound-absorbing material
SR 200/900		Silencers made of galvanized steel filled with non-combustible sound-absorbing material
SR 200/1200		Silencers made of galvanized steel filled with non-combustible sound-absorbing material

For round ducts

Name	Photo	Description
KOM 200		Backdraught damper with spring-loaded plates for shutting off air flow in round air ducts
KRV 200		Air dampers for automatic air flow control in round ducts

Mixing chambers

Name	Photo	Description
USWK 3/4-4		The mixing unit USWK is designed for smooth heat medium flow control in ventilation systems equipped with water heaters or coolers for supply air temperature regulation
USWK 3/4-6		The mixing unit USWK is designed for smooth heat medium flow control in ventilation systems equipped with water heaters or coolers for supply air temperature regulation
USWK 1-6		The mixing unit USWK is designed for smooth heat medium flow control in ventilation systems equipped with water heaters or coolers for supply air temperature regulation
USWK 1-10		The mixing unit USWK is designed for smooth heat medium flow control in ventilation systems equipped with water heaters or coolers for supply air temperature regulation

USWK 1 1/4-10		The mixing unit USWK is designed for smooth heat medium flow control in ventilation systems equipped with water heaters or coolers for supply air temperature regulation
USWK 1 1/4-16		The mixing unit USWK is designed for smooth heat medium flow control in ventilation systems equipped with water heaters or coolers for supply air temperature regulation
USWK 1 1/2-16		The mixing unit USWK is designed for smooth heat medium flow control in ventilation systems equipped with water heaters or coolers for supply air temperature regulation
USWK 1 1/2-25		The mixing unit USWK is designed for smooth heat medium flow control in ventilation systems equipped with water heaters or coolers for supply air temperature regulation
USWK 2-25		The mixing unit USWK is designed for smooth heat medium flow control in ventilation systems equipped with water heaters or coolers for supply air temperature regulation
USWK 2-40		The mixing unit USWK is designed for smooth heat medium flow control in ventilation systems equipped with water heaters or coolers for supply air temperature regulation

Electric actuators

Name	Photo	Description
Belimo TF230		The actuators are designed for controlling air dampers with cross section up to 0.4 m² performing protection functions

Other accessories

Name	Photo	Description
SF 782x128x20 G4		Panel filter G4
SFK 392x236x27 F7		F7 pocket filter
SFK 392x236x27 G4		G4 pocket filter

Ecodesign

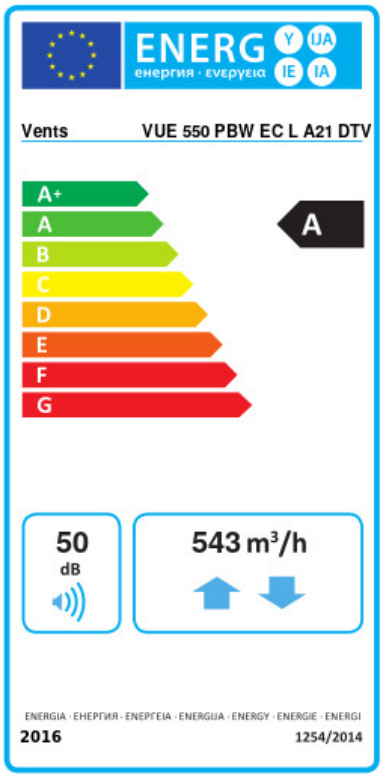

Trademark	Vents					
Model	VUE 550 PBW EC L A21 DTV					
Specific energy consumption (SEC) (kWh/(m²/a))	Cold		Average		Warm	
	-74.9	A+	-38.8	A	-15.5	E
Type of ventilation unit	Bidirectional					
Type of drive installed	Variable speed					
Type of heat recovery system	Recuperative					
Thermal efficiency of heat recovery (%)	73					
Maximum flow rate (m³/h)	543					
Electric power input (W)	322					
Reference flow rate (m³/s)	0.106					
Reference pressure difference (Pa)	50					
Specific power input (SPI) (W/(m³/h))	0.316					
Control typology	Local demand control					
Maximum internal leakage rates (%)	2.7					
Maximum external leakage rates (%)	2.7					
Declared typology	RVU BVU					
Sound power level (dB(A))	50					
The annual electricity consumption (AEC) (kWh/a)	Cold		Average		Warm	
	749		212		167	
The annual heating saved (AHS) (kWh/a)	Cold		Average		Warm	
	8493		4341		1963	