VUE 400 HBE EC A21

Horizontal air handling units with a counterflow polystyrene or enthalpy heat exchanger



- Power of electrical reheater: 2800
- Sound pressure level LpA at 3 m: 27
- Heat exchanger type: Counter flow
- Heat exchanger material: Enthalpy
- Supply filter: G4+F7
- Extract filter: G4
- Sound-insulated casing
- Enthalpy heat exchanger
- Bypass: Auto
- Reheater: Electric
- Preheater: Optional
- BMS protocol: ModBus
- Control: Smartphone
- Casing material: Galvanized steel
- Humidity sensor: Optional
- CO2 sensor: Optional
- PM2.5 sensor: Optional

	Unit of measurement	VUE 400 HBE EC A21
Connected air duct size	mm	200
Phases	-	1
Minimum supply voltage	V	230
Maximum supply voltage	V	230
Power supply frequency	Hz	50/60
Rated power	W	289
Power of electrical reheater	W	2800
Unit current	A	14.3
Maximum airflow	m^3/h	540
Rotation speed at 50hz	-	2600
Sound pressure level LpA at 3 m	dB(A)	27
Heat recovery efficiency, max	%	89
Heat exchanger type	-	Counter flow
Heat exchanger material	-	Enthalpy
Weight	kg	76
Supply filter	-	G4+F7
Extract filter	-	G4
Transported air temperature (max)	°C	40
Transported air temperature (min)	°C	-25
Ambient air temperature min	°C	1
Ambient air temperature max	°C	40

Ingress protection rating	-	IP22
Ambient air humidity max	%	80
Ingress protection rating of the drive	-	IP44

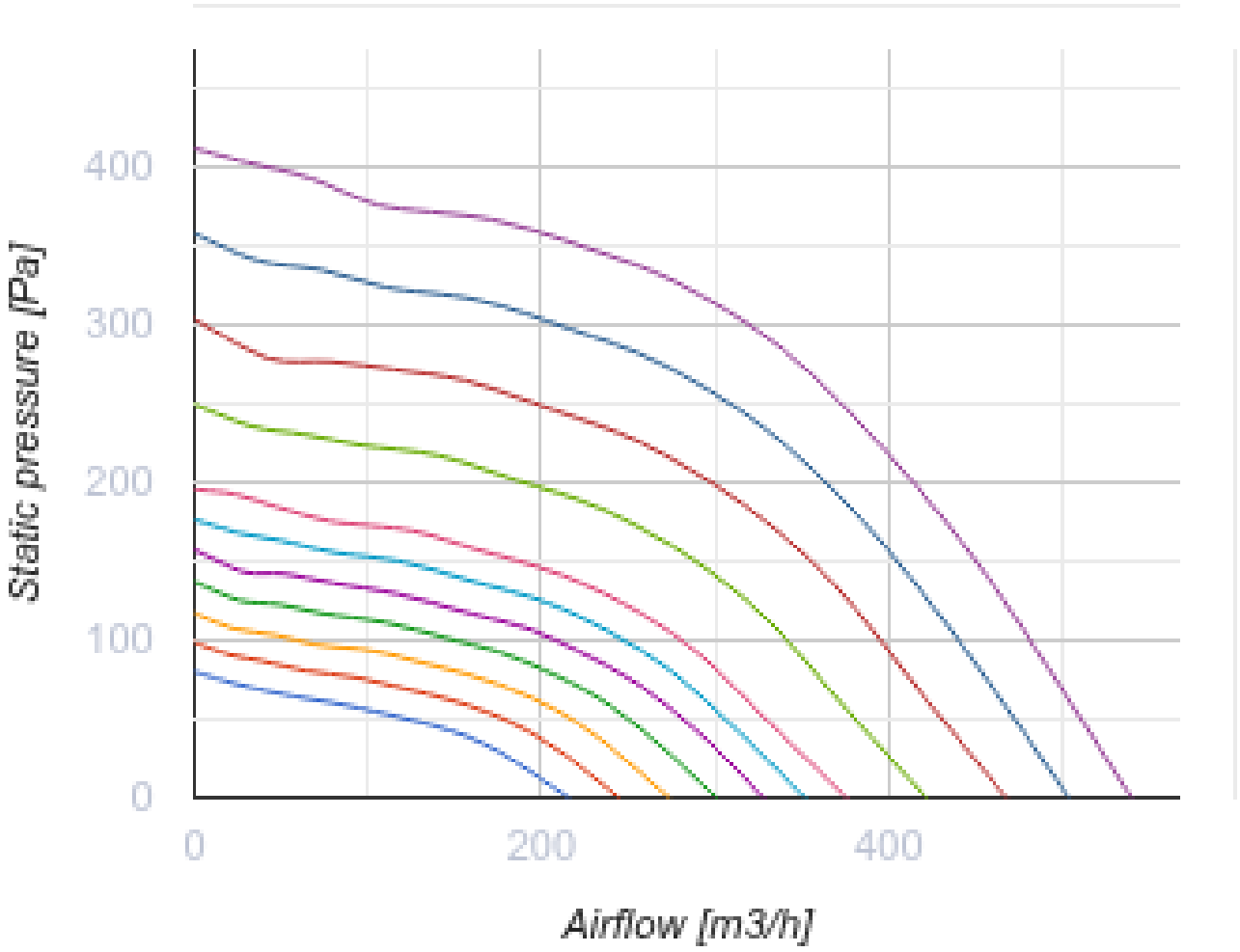

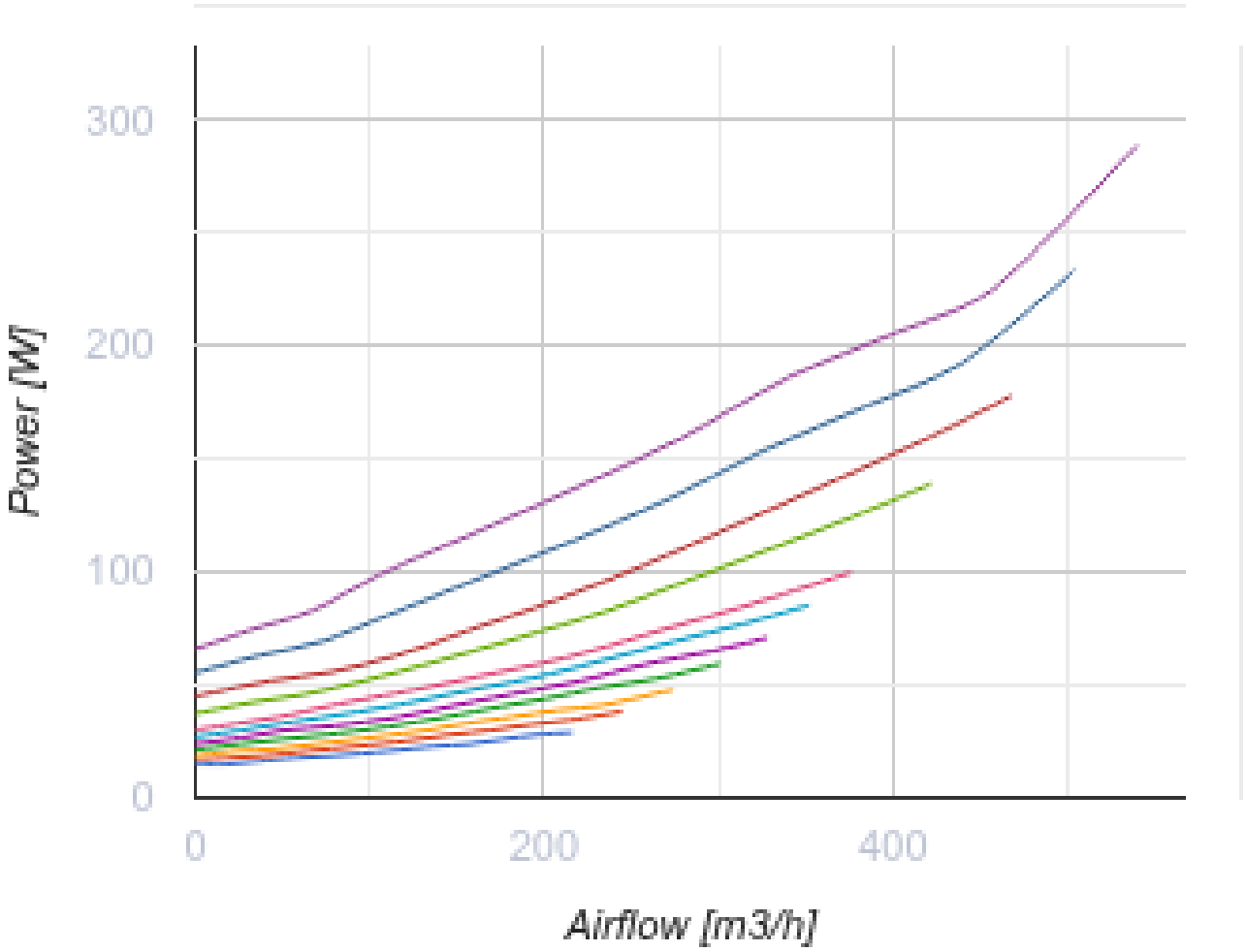

Dimensions

ØD	B	B1	B2	H	H1	H2	L	L1
197	682	248	217	504	201	141	1094	1191

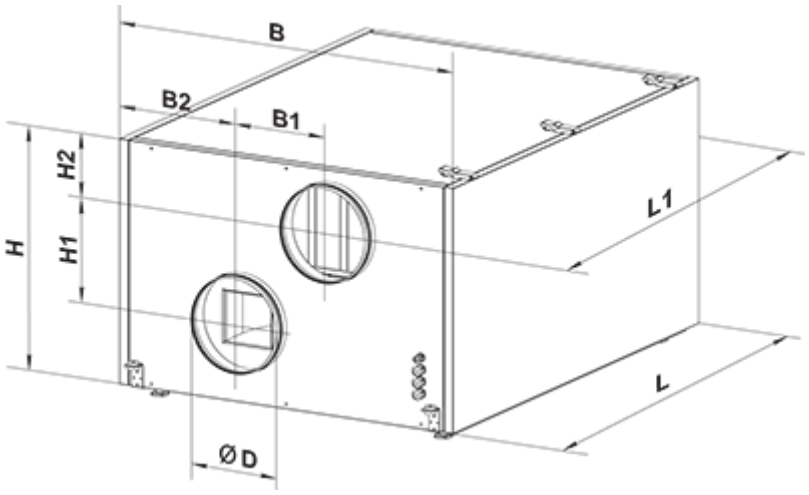

Accessories

Control Panels for AHU

Name	Photo	Description
A25		Touch screen control panel for controlling industrial and residential air handling units
A22		Control panels for controlling industrial and residential air handling units
A22 WiFi		Control panels for controlling industrial and residential air handling units

Sensors

Name	Photo	Description
HV2		Humidity sensor
CO2-1		CO2 sensors
CO2-2		CO2 sensors
HR-S		Electro-mechanical humidistat

Electrical heaters

Name	Photo	Description

NKP 200-1,2-1 A21 V.2		Inline heaters for heat exchanger frost protection
NKP 200-1,7-1 A21 V.2		Inline heaters for heat exchanger frost protection
NKP 200-2,0-1 A21 V.2		Inline heaters for heat exchanger frost protection

For round ducts

Name	Photo	Description
SR 200/600		Silencers made of galvanized steel filled with non-combustible sound-absorbing material
SR 200/900		Silencers made of galvanized steel filled with non-combustible sound-absorbing material
SR 200/1200		Silencers made of galvanized steel filled with non-combustible sound-absorbing material

For round ducts

Name	Photo	Description
KOM 200		Backdraught damper with spring-loaded plates for shutting off air flow in round air ducts
KRV 200		Air dampers for automatic air flow control in round ducts

Electric actuators

Name	Photo	Description
Belimo TF230		The actuators are designed for controlling air dampers with cross section up to 0.4 m² performing protection functions

Other accessories

Name	Photo	Description
SF 600x205x48 G4		Panel filter G4

SF 600x205x48 F7		F7 panel filter

Ecodesign

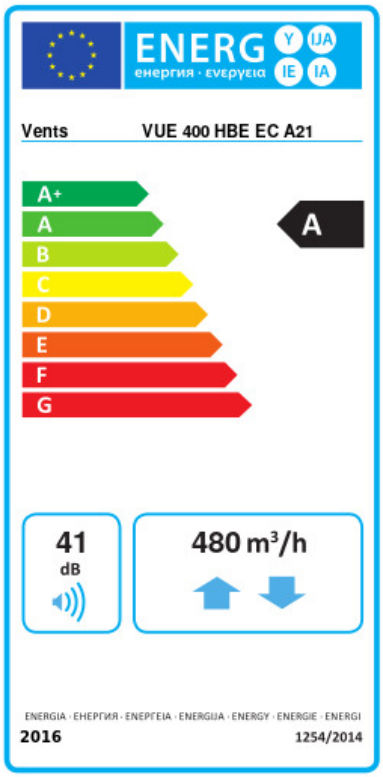

Trademark	Vents					
Model	VUE 400 HBE EC A21					
Specific energy consumption (SEC) (kWh/(m²/a))	Cold		Average		Warm	
	-79.2	A+	-41.3	A	-16.9	E
Type of ventilation unit	Bidirectional					
Type of drive installed	Variable speed					
Type of heat recovery system	Recuperative					
Thermal efficiency of heat recovery (%)	82					
Maximum flow rate (m³/h)	480					
Electric power input (W)	240					
Reference flow rate (m³/s)	0.092					
Reference pressure difference (Pa)	50					
Specific power input (SPI) (W/(m³/h))	0.268					
Control typology	Local demand control					
Maximum internal leakage rates (%)	2.7					
Maximum external leakage rates (%)	2.7					
Declared typology	RVU BVU					
Sound power level (dB(A))	41					
The annual electricity consumption (AEC) (kWh/a)	Cold		Average		Warm	
	724		187		142	
The annual heating saved (AHS) (kWh/a)	Cold		Average		Warm	
	8857		4528		2047	