VUE 300 H2 mini EC A14

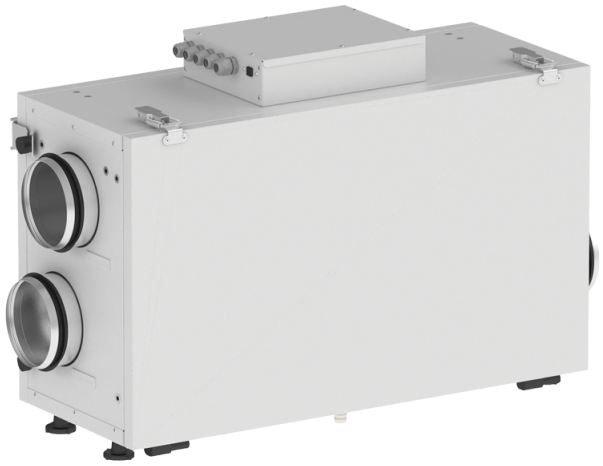

Suspended air handling units with a crossflow polystyrene heat exchanger

- Sound pressure level LpA at 3 m: 33
- Heat exchanger type: Cross flow
- Heat exchanger material: Enthalpy
- Supply filter: G4, F8
- Extract filter: G4
- Sound-insulated casing
- Enthalpy heat exchanger
- Control: Remote Control
- Casing material: Galvanized steel
- Humidity sensor: Optional
- CO2 sensor: Optional
- PM2.5 sensor: Optional

	Unit of measurement	VUE 300 H2 mini EC A14
Connected air duct size	mm	125
Phases	-	1
Maximum supply voltage	V	230
Minimum supply voltage	V	230
Power supply frequency	Hz	50/60
Rated power	W	165
Unit current	A	1.3
Maximum airflow	m^3/h	300
Rotation speed at 50hz	-	2050
Sound pressure level LpA at 3 m	dB(A)	33
Heat recovery efficiency, max	%	73
Heat exchanger type	-	Cross flow
Heat exchanger material	-	Enthalpy
Weight	kg	28
Supply filter	-	G4, F8
Extract filter	-	G4
Transported air temperature (max)	°C	60
Transported air temperature (min)	°C	-25
Ambient air temperature min	°C	1

Ambient air temperature max	°C	40
Ingress protection rating	-	IP22
Ambient air humidity max	%	80
Ingress protection rating of the drive	-	IP44

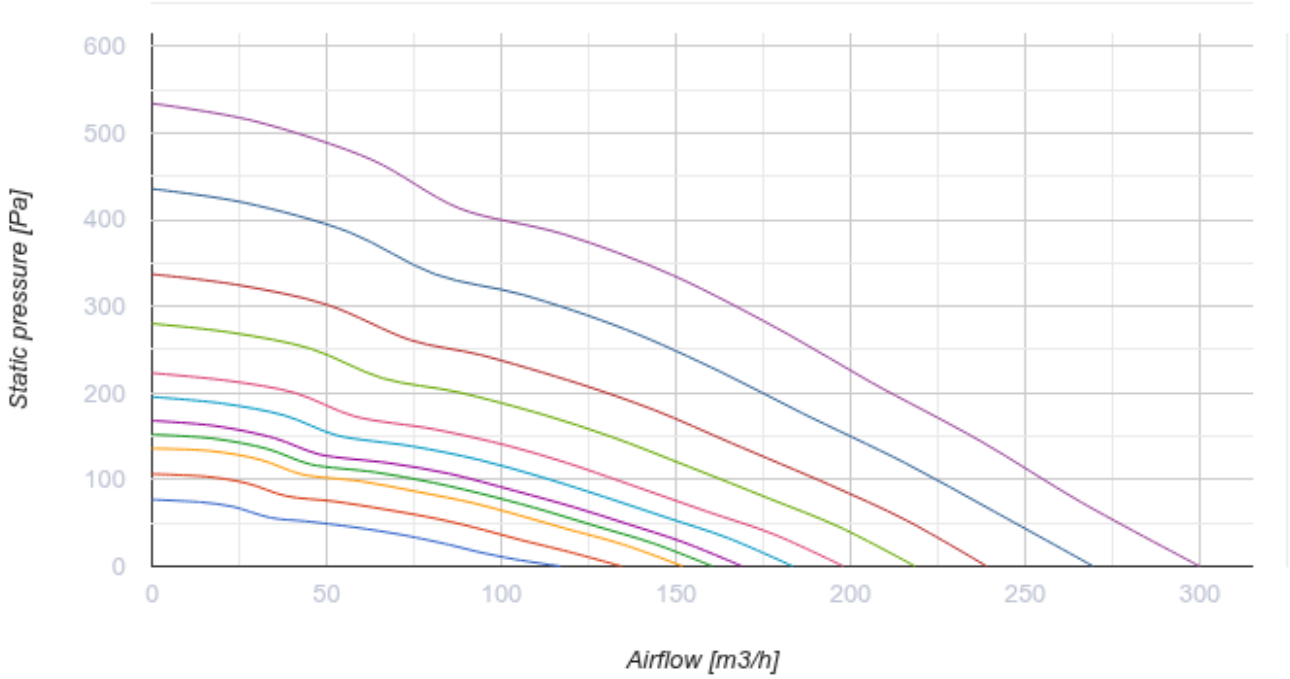

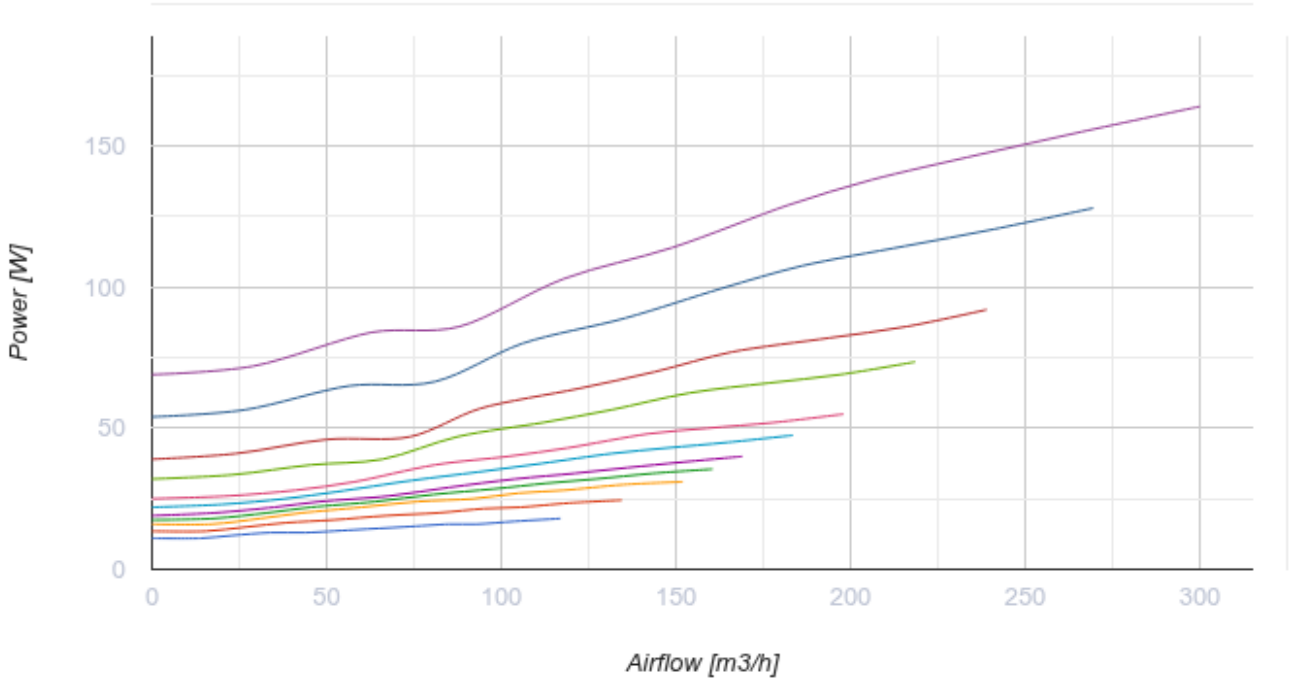

Dimensions

ØD	B	H	H1	L	L1
125	287	447	510	714	810

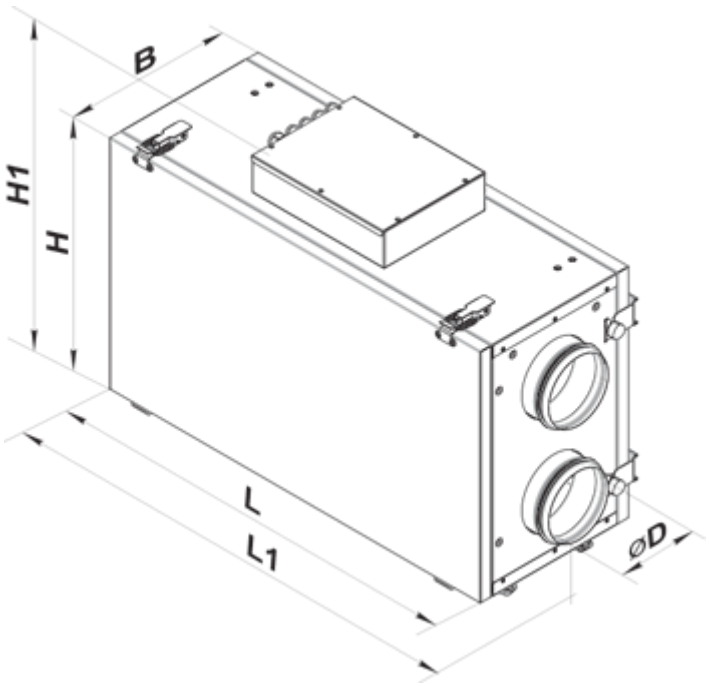

Accessories

Sensors

Name	Photo	Description
HV2		Humidity sensor
CO2-1		CO2 sensors
CO2-2		CO2 sensors
HR-S		Electro-mechanical humidistat

Condensation drainage

Name	Photo	Description

SH-32		Hydraulic U-trap to drain condensate from heat exchangers and coolers

For round ducts

Name	Photo	Description
SR 125/600		Silencers made of galvanized steel filled with non-combustible sound-absorbing material
SR 125/900		Silencers made of galvanized steel filled with non-combustible sound-absorbing material
SR 125/1200		Silencers made of galvanized steel filled with non-combustible sound-absorbing material
SRF 125/600		Silencers made of aluminium alloy filled with non-combustible sound-absorbing material
SRF 125/900		Silencers made of aluminium alloy filled with non-combustible sound-absorbing material
SRF 125/2000		Silencers made of aluminium alloy filled with non-combustible sound-absorbing material

For round ducts

Name	Photo	Description
KOM 125		Backdraught damper with spring-loaded plates for shutting off air flow in round air ducts
KRV 125		Air dampers for automatic air flow control in round ducts

Electric actuators

Name	Photo	Description
Belimo LF230		The Belimo LF series actuators are designed for controlling air dampers with cross section up to 0.8 m² performing protection functions

Other accessories

Name	Photo	Description
SF 240x184x40 G4		Panel filter G4

SF 240x184x40 F8		F8 panel filter

Ecodesign

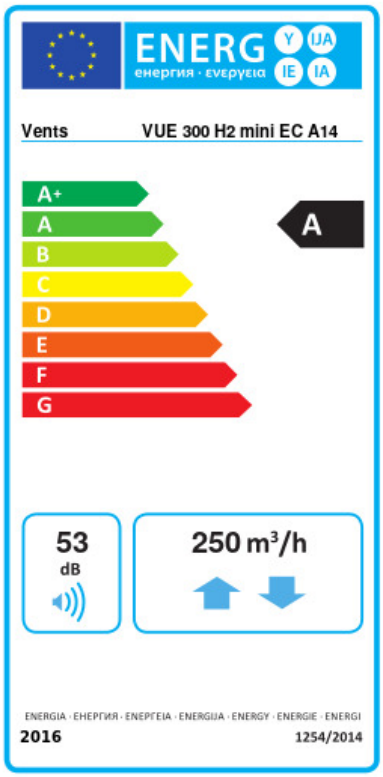

Trademark	Vents					
Model	VUE 300 H2 mini EC A14					
Specific energy consumption (SEC) (kWh/(m²/a))	Cold		Average		Warm	
	-68.9	A+	-35.7	A	-14.1	E
Type of ventilation unit	Bidirectional					
Type of drive installed	Variable speed					
Type of heat recovery system	Recuperative					
Thermal efficiency of heat recovery (%)	58					
Maximum flow rate (m³/h)	250					
Electric power input (W)	150					
Reference flow rate (m³/s)	0.044					
Reference pressure difference (Pa)	50					
Specific power input (SPI) (W/(m³/h))	0.313					
Control typology	Local demand control					
Maximum internal leakage rates (%)	2.7					
Maximum external leakage rates (%)	2.7					
Declared typology	RVU BVU					
Sound power level (dB(A))	53					
The annual electricity consumption (AEC) (kWh/a)	Cold		Average		Warm	
	747		210		165	
The annual heating saved (AHS) (kWh/a)	Cold		Average		Warm	
	7885		4031		1823	