VUE 250 P3B EC R A14

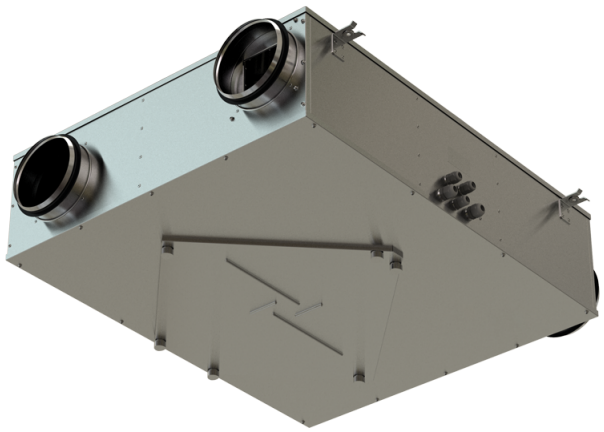

Heat recovery air handling units in heat- and sound-insulated casing

- Sound pressure level LpA at 3 m: 36
- Heat exchanger type: Cross flow
- Heat exchanger material: Enthalpy
- Supply filter: G4 and F8 (PM2.5 83%)
- Extract filter: G4
- Sound-insulated casing
- Enthalpy heat exchanger
- Bypass: Manual
- Control: Remote Control
- Casing material: Coated steel
- Humidity sensor: Optional
- CO2 sensor: Optional
- PM2.5 sensor: Optional

	Unit of measurement	VUE 250 P3B EC R A14
Connected air duct size	mm	150
Phases	-	1
Minimum supply voltage	V	230
Maximum supply voltage	V	230
Power supply frequency	Hz	50/60
Rated power	W	84
Unit current	A	0.7
Maximum airflow	m³/h	300
Rotation speed at 50hz	-	2000
Sound pressure level LpA at 3 m	dB(A)	36
Heat recovery efficiency, max	%	73
Heat exchanger type	-	Cross flow
Heat exchanger material	-	Enthalpy
Weight	kg	29
Supply filter	-	G4 and F8 (PM2.5 83%)
Extract filter	-	G4
Transported air temperature (max)	°C	40
Transported air temperature (min)	°C	-15
Ambient air temperature min	°C	1

Ambient air temperature max	°C	40
Ingress protection rating	-	IP22
Ambient air humidity max	%	60
Ingress protection rating of the drive	-	IP44

Dimensions

ØD	A	B	H
149	854	704	227

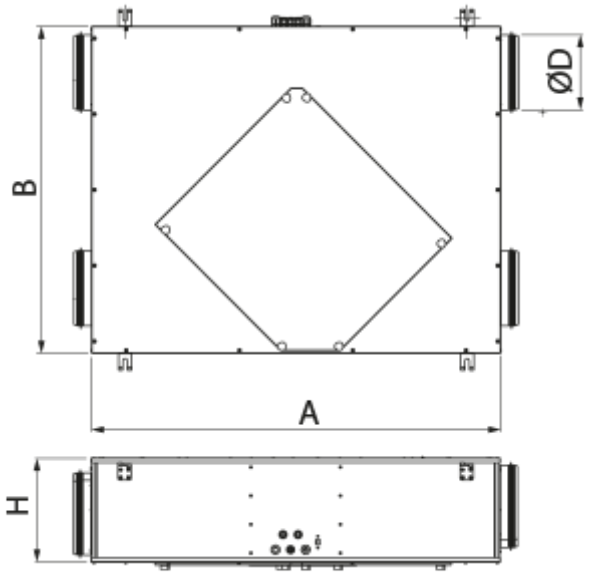

Accessories

Sensors

Name	Photo	Description
HV2		Humidity sensor
CO2-1		CO2 sensors
CO2-2		CO2 sensors
HR-S		Electro-mechanical humidistat

Condensation drainage

Name	Photo	Description
SH-32		Hydraulic U-trap to drain condensate from heat exchangers and coolers

For round ducts

Name	Photo	Description
KRV 150		Air dampers for automatic air flow control in round ducts

Electric actuators

Name	Photo	Description
Belimo LF230		The Belimo LF series actuators are designed for controlling air dampers with cross section up to 0.8 m² performing protection functions

Other accessories

Name	Photo	Description
SF 300x220x48 G4		Panel filter G4
SF 300x220x48 F8		F8 panel filter