VUE 180 P5B EC A14

Suspended air handling units with a counterflow polystyrene or enthalpy heat exchanger



- Sound pressure level LpA at 3 m: 33
- Heat exchanger type: Counter flow
- Heat exchanger material: Enthalpy
- Supply filter: G4, F7
- Extract filter: G4
- Sound-insulated casing
- Enthalpy heat exchanger
- Bypass: Manual
- Control: Remote Control
- Casing material: EPP
- Installation in any position
- Humidity sensor: Optional
- CO2 sensor: Optional
- PM2.5 sensor: Optional

	Unit of measurement	VUE 180 P5B EC A14
Connected air duct size	mm	150
Phases	-	1
Minimum supply voltage	V	230
Maximum supply voltage	V	230
Power supply frequency	Hz	50/60
Rated power	W	87
Unit current	A	0.71
Maximum airflow	m³/h	220
Rotation speed at 50hz	-	2200
Sound pressure level LpA at 3 m	dB(A)	33
Heat recovery efficiency, max	%	94
Heat exchanger type	-	Counter flow
Heat exchanger material	-	Enthalpy
Weight	kg	14
Supply filter	-	G4, F7
Extract filter	-	G4
Transported air temperature (max)	°C	40
Transported air temperature (min)	°C	-25
Ambient air temperature min	°C	1
Ambient air temperature max	°C	40
Ingress protection rating	-	IP22

Ambient air humidity max	%	60
Ingress protection rating of the drive	-	IP44

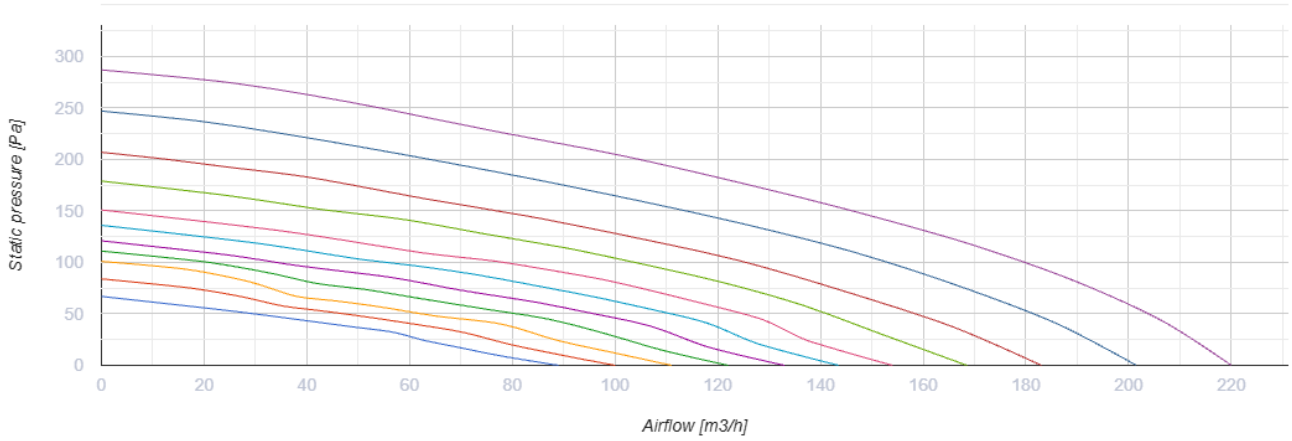

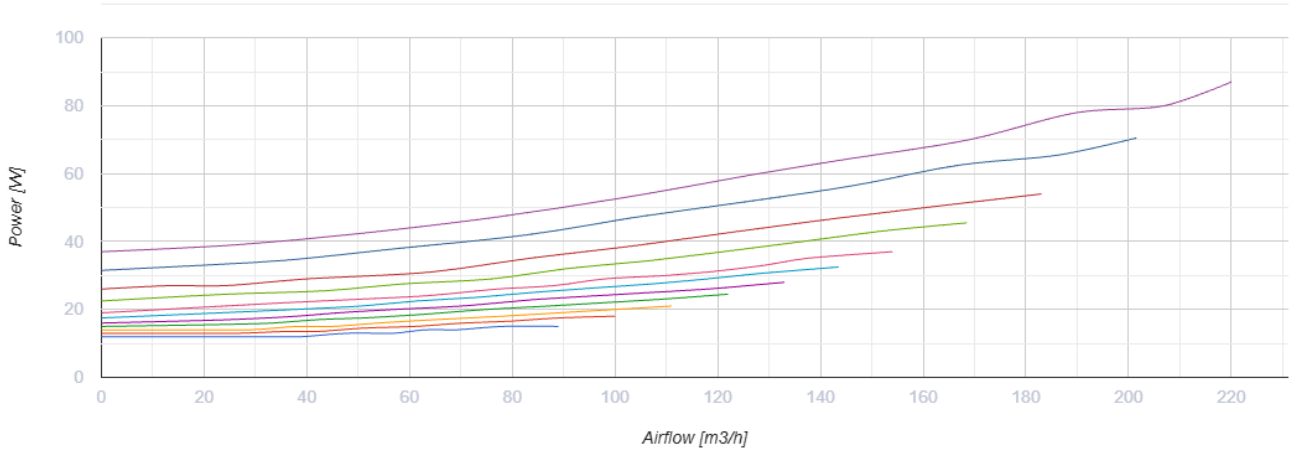

Dimensions

ØD	B	B2	H	L	L1
150	600	326	264	900	1009

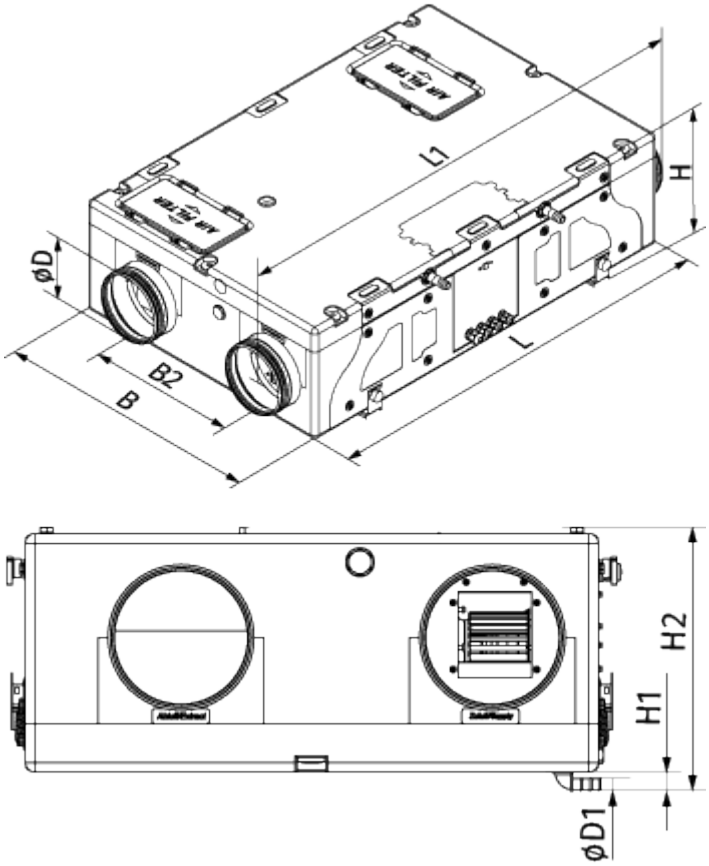

Accessories

Sensors

Name	Photo	Description
HV2		Humidity sensor
CO2-1		CO2 sensors
CO2-2		CO2 sensors
HR-S		Electro-mechanical humidistat

For round ducts

Name	Photo	Description
KRV 150		Air dampers for automatic air flow control in round ducts

Electric actuators

Name	Photo	Description
Belimo LF230		The Belimo LF series actuators are designed for controlling air dampers with cross section up to 0.8 m² performing protection functions

Other accessories

Name	Photo	Description
SF 214x186x18 G4		Panel filter G4
SF 214x186x48 F7		F7 panel filter

Ecodesign

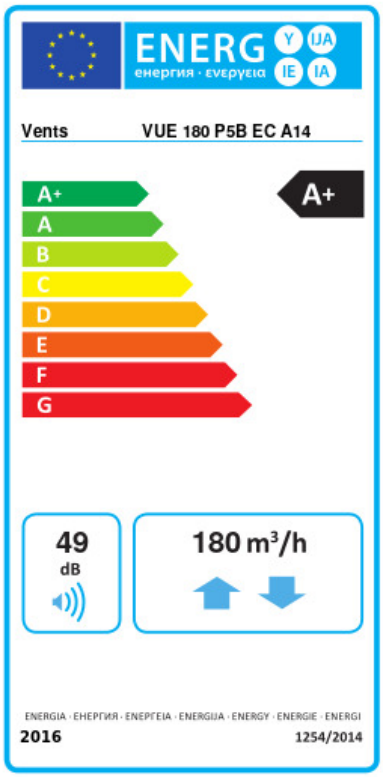

Trademark	Vents					
Model	VUE 180 P5B EC A14					
Specific energy consumption (SEC) (kWh/(m²/a))	Cold		Average		Warm	
	-80.7	A+	-42.2	A+	-17.5	E
Type of ventilation unit	Bidirectional					
Type of drive installed	Variable speed					
Type of heat recovery system	Recuperative					
Thermal efficiency of heat recovery (%)	85					
Maximum flow rate (m³/h)	180					
Electric power input (W)	77					
Reference flow rate (m³/s)	0.035					
Reference pressure difference (Pa)	50					
Specific power input (SPI) (W/(m³/h))	0.248					
Control typology	Local demand control					
Maximum internal leakage rates (%)	2.7					
Maximum external leakage rates (%)	2.7					
Sound power level (dB(A))	49					
Declared typology	RVU BVU					
The annual electricity consumption (AEC) (kWh/a)	Cold		Average		Warm	
	713		176		131	
The annual heating saved (AHS) (kWh/a)	Cold		Average		Warm	
	8979		4590		2075	