VUE 100 P3 R A3

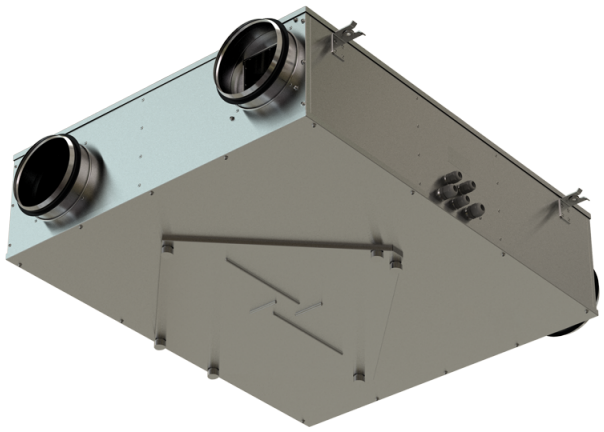

Heat recovery air handling units in heat- and sound-insulated casing

- Sound pressure level LpA at 3 m: 47
- Heat exchanger type: Cross flow
- Heat exchanger material: Enthalpy
- Supply filter: G4 and F8 (PM2.5 93%)
- Extract filter: G4
- Sound-insulated casing
- Enthalpy heat exchanger
- Control: Remote Control
- Casing material: Coated steel

	Unit of measurement	VUE 100 P3 R A3
Connected air duct size	mm	100
Phases	-	1
Maximum supply voltage	V	230
Minimum supply voltage	V	230
Power supply frequency	Hz	50
Rated power	W	76
Unit current	A	0.33
Maximum airflow	m^3/h	160
Rotation speed at 50hz	-	2750
Sound pressure level LpA at 3 m	dB(A)	47
Heat recovery efficiency, max	%	87
Heat exchanger type	-	Cross flow
Heat exchanger material	-	Enthalpy
Weight	kg	17
Supply filter	-	G4 and F8 (PM2.5 93%)
Extract filter	-	G4
Transported air temperature (max)	°C	40
Transported air temperature (min)	°C	-15
Ambient air temperature max	°C	40
Ingress protection rating	-	IP22
Ingress protection rating of the drive	-	IP44

Ambient air humidity max	%	60

Dimensions

ØD	A	B	H
100	600	481	203

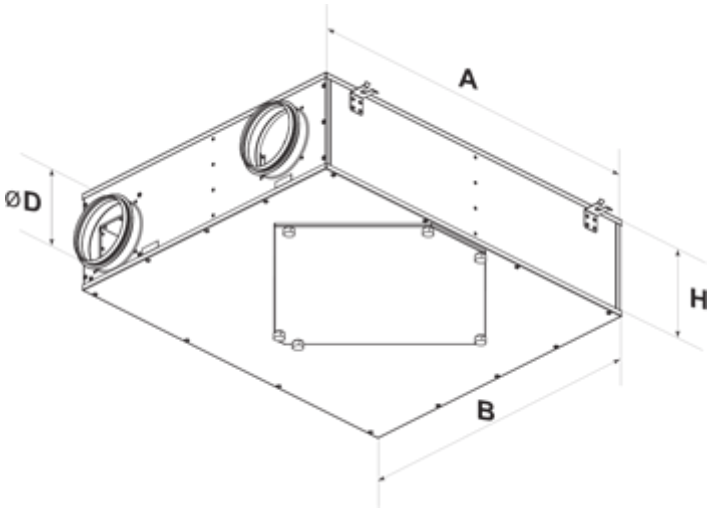

Accessories

Speed control switches

Name	Photo	Description
P3-1-300		Switch

Other accessories

Name	Photo	Description
SF 200x191x20 G4		Panel filter G4
SF 200x191x20 F8		F8 panel filter

Ecodesign

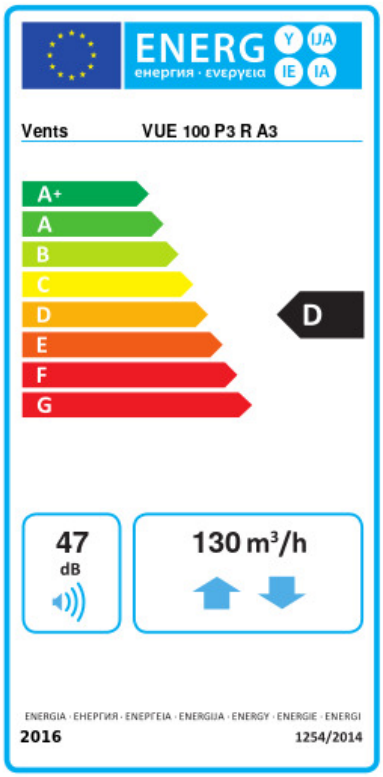

Trademark	Vents					
Model	VUE 100 P3 R A3					
Specific energy consumption (SEC) (kWh/(m²/a))	Cold		Average		Warm	
	-57	A+	-21.9	D	0.8	G
Type of ventilation unit	Bidirectional					
Type of drive installed	Variable speed					
Type of heat recovery system	Recuperative					
Thermal efficiency of heat recovery (%)	79					
Maximum flow rate (m³/h)	130					
Electric power input (W)	73					
Reference flow rate (m³/s)	0.031					
Reference pressure difference (Pa)	50					
Specific power input (SPI) (W/(m³/h))	0.636					
Control typology	Manual control					
Maximum internal leakage rates (%)	2.7					
Maximum external leakage rates (%)	2.7					
Declared typology	RVU BVU					
Sound power level (dB(A))	47					
The annual electricity consumption (AEC) (kWh/a)	Cold		Average		Warm	
	1379		842		797	
The annual heating saved (AHS) (kWh/a)	Cold		Average		Warm	
	8278		4231		1913	