VUE 100 P mini

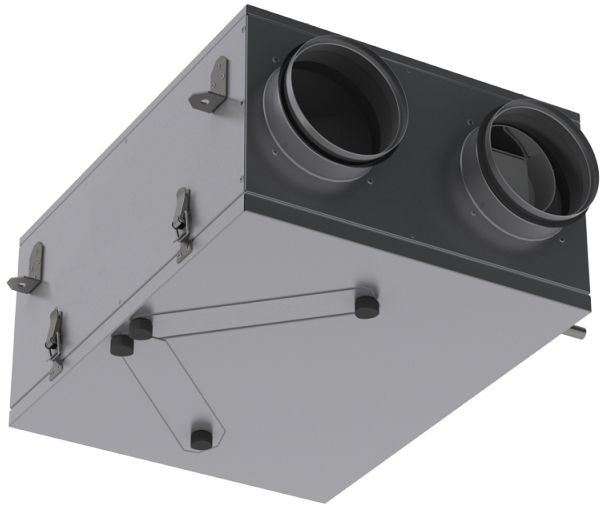

Suspended air handling units with a crossflow polystyrene heat exchanger

- Sound pressure level LpA at 3 m: 41
- Heat exchanger type: Cross flow
- Heat exchanger material: Enthalpy
- Supply filter: G4
- Extract filter: G4
- Sound-insulated casing
- Enthalpy heat exchanger
- Control: Remote Control
- Casing material: Galvanized steel

	Unit of measurement	VUE 100 P mini		
Speed	-	1	2	3
Connected air duct size	mm	125		
Phases	-	1		
Maximum supply voltage	V	230		
Minimum supply voltage	V	230		
Power supply frequency	Hz	50		
Rated power	W	56		
Unit current	A	0.34		
Maximum airflow	m³/h	55	74	100
Rotation speed at 50hz	-	1300	1950	2500
Sound pressure level LpA at 3 m	dB(A)	24	32	41
Heat recovery efficiency, max	%	72		
Heat exchanger type	-	Cross flow		
Heat exchanger material	-	Enthalpy		
Weight	kg	10		
Supply filter	-	G4		
Extract filter	-	G4		
Transported air temperature (max)	°C	40		
Transported air temperature (min)	°C	-25		
Ambient air temperature min	°C	1		
Ambient air temperature max	°C	40		

Ingress protection rating	-	IP22
Ambient air humidity max	%	60
Ingress protection rating of the drive	-	IP44

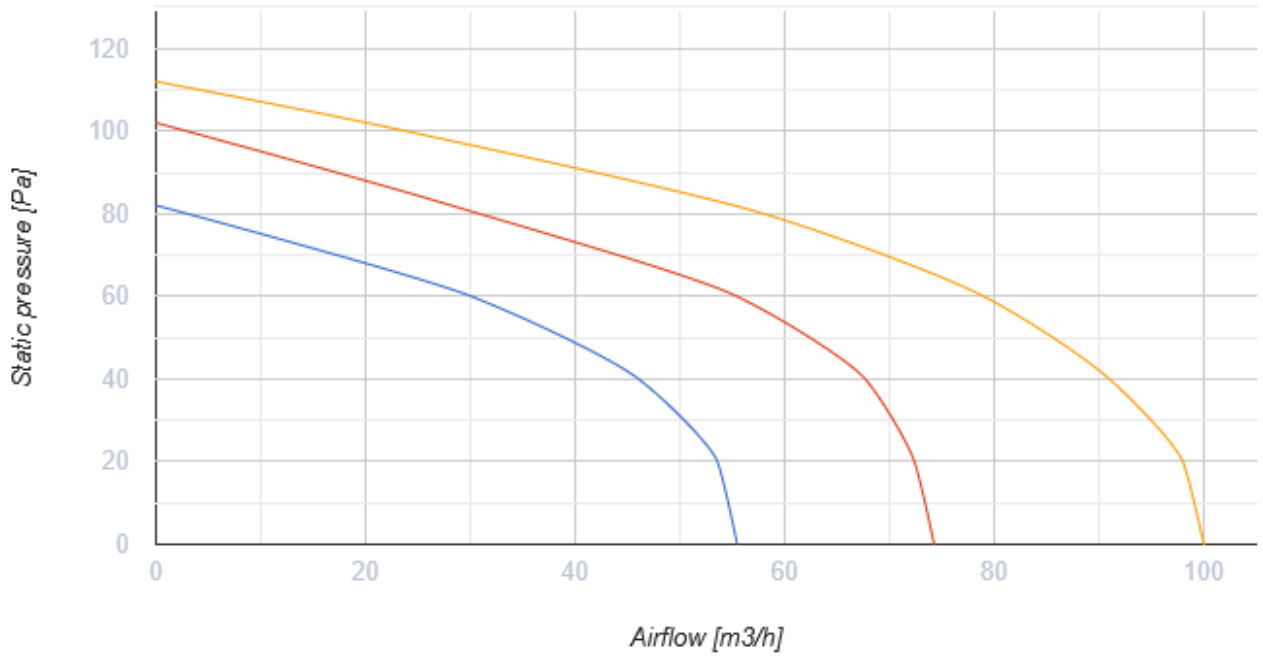

Dimensions

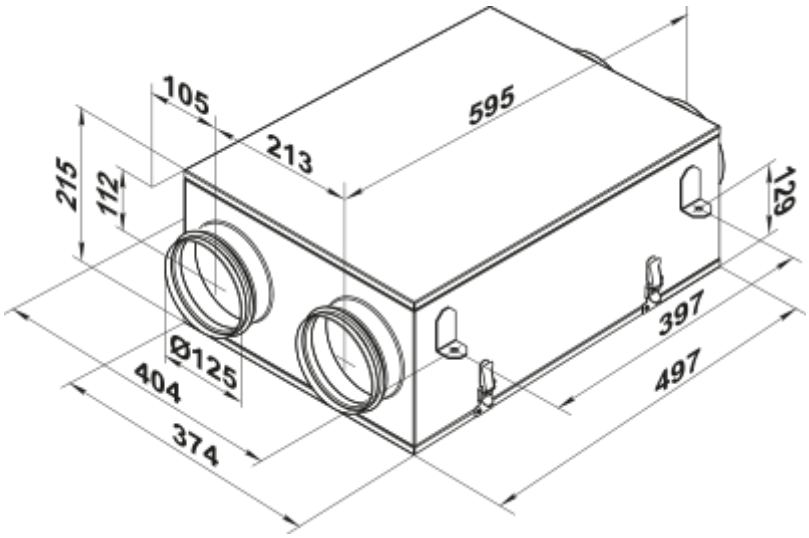

Accessories

For round ducts

Name	Photo	Description

SR 125/600		Silencers made of galvanized steel filled with non-combustible sound-absorbing material
SR 125/900		Silencers made of galvanized steel filled with non-combustible sound-absorbing material
SR 125/1200		Silencers made of galvanized steel filled with non-combustible sound-absorbing material
SRF 125/600		Silencers made of aluminium alloy filled with non-combustible sound-absorbing material
SRF 125/900		Silencers made of aluminium alloy filled with non-combustible sound-absorbing material
SRF 125/2000		Silencers made of aluminium alloy filled with non-combustible sound-absorbing material

For round ducts

Name	Photo	Description
KOM 125		Backdraught damper with spring-loaded plates for shutting off air flow in round air ducts
KR 125		Air dampers for controlling air flow in round air ducts

Other accessories

Name	Photo	Description
SF 200x190x18 G4		Panel filter G4

Ecodesign

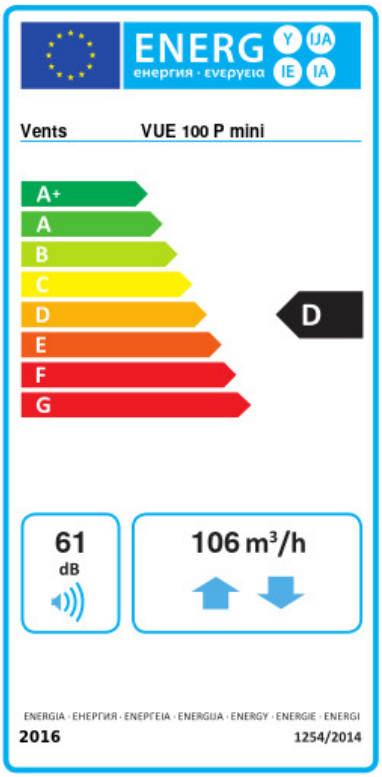

Trademark	Vents					
Model	VUE 100 P mini					
Specific energy consumption (SEC) (kWh/(m²/a))	Cold		Average		Warm	
	-55.3	A+	-23	D	-1.8	F
Type of ventilation unit	Bidirectional					
Type of drive installed	Multi-speed					
Type of heat recovery system	Recuperative					
Thermal efficiency of heat recovery (%)	70					
Maximum flow rate (m³/h)	106					
Electric power input (W)	56					
Reference flow rate (m³/s)	0.021					
Reference pressure difference (Pa)	50					
Specific power input (SPI) (W/(m³/h))	0.512					
Control typology	Manual control					
Maximum internal leakage rates (%)	2.7					
Maximum external leakage rates (%)	2.7					
Declared typology	RVU BVU					
Sound power level (dB(A))	61					
The annual electricity consumption (AEC) (kWh/a)	Cold		Average		Warm	
	1224		687		642	
The annual heating saved (AHS) (kWh/a)	Cold		Average		Warm	
	7717		3945		1784	