VPA 250-3,6-3 LCD



Supply units in the compact sound- and heat-insulated casing with electric heater

- Power of electrical reheater: 3600
- Sound pressure level LpA at 3 m: 30
- Filter: G4
- Sound-insulated casing
- Reheater: Electric
- Control: Remote Control
- Casing material: Galvanized steel

	Unit of measurement	VPA 250-3,6-3 LCD
Connected air duct size	mm	250
Phases	-	3
Minimum supply voltage	V	400
Maximum supply voltage	V	400
Power supply frequency	Hz	50
Rated power	W	194
Power of electrical reheater	W	3600
Unit current	A	5.3
Maximum airflow	m³/h	990
Rotation speed at 50hz	-	2790
Sound pressure level LpA at 3 m	dB(A)	30
Weight	kg	55
Filter	-	G4
Transported air temperature (max)	°C	55
Transported air temperature (min)	°C	-25
Ambient air temperature max	°C	40
Ingress protection rating	-	IP22
Ambient air humidity max	%	80
Ingress protection rating of the drive	-	IP44

Dimensions

ØD	B	B1	H	L	L1
249	487	526.5	513	835	684

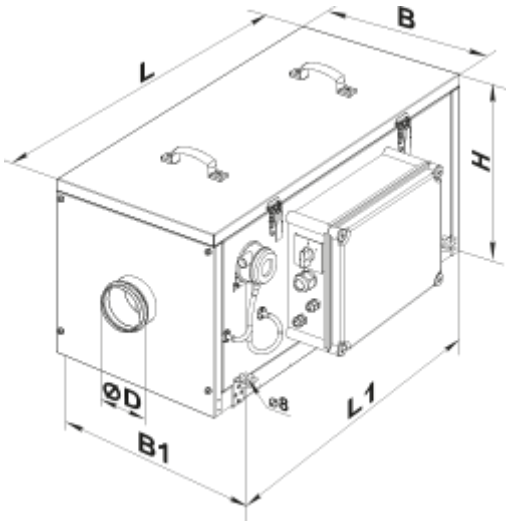

Accessories

For round ducts

Name	Photo	Description
SR 250/600		Silencers made of galvanized steel filled with non-combustible sound-absorbing material
SR 250/900		Silencers made of galvanized steel filled with non-combustible sound-absorbing material
SR 250/1200		Silencers made of galvanized steel filled with non-combustible sound-absorbing material
SRF 250/600		Silencers made of aluminium alloy filled with non-combustible sound-absorbing material
SRF 250/900		Silencers made of aluminium alloy filled with non-combustible sound-absorbing material
SRF 250/2000		Silencers made of aluminium alloy filled with non-combustible sound-absorbing material

For round ducts

Name	Photo	Description

KOM 250		Backdraught damper with spring-loaded plates for shutting off air flow in round air ducts
KRV 250		Air dampers for automatic air flow control in round ducts

For round ducts

Name	Photo	Description
VVG 250	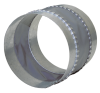	Flexible anti-vibration inserts for round ducts

Other accessories

Name	Photo	Description
SF 439x428x70 G4		Panel filter G4