VP 125 K Q



Centrifugal ceiling fans in metal casing with plastic front panels

• Sound pressure level LpA at 3 m: 43
• Impeller type: Centrifugal impeller with backward curved blades
• Casing material: Galvanized steel

	Unit of measurement	VP 125 K Q
Connected air duct size	mm	125
Phases	-	1
Minimum supply voltage	V	230
Maximum supply voltage	V	230
Power supply frequency	Hz	50/60
Rated power	W	56
Unit current	A	0.34
Maximum airflow	m^3/h	225
Rotation speed at 50hz	-	2300
Sound pressure level LpA at 3 m	dB(A)	43
Weight	kg	3.4
Transported air temperature (max)	°C	45
Transported air temperature (min)	°C	-25
Ingress protection rating	-	IPX4
Ingress protection rating of the drive	-	IP44
Impeller material	-	Plastic

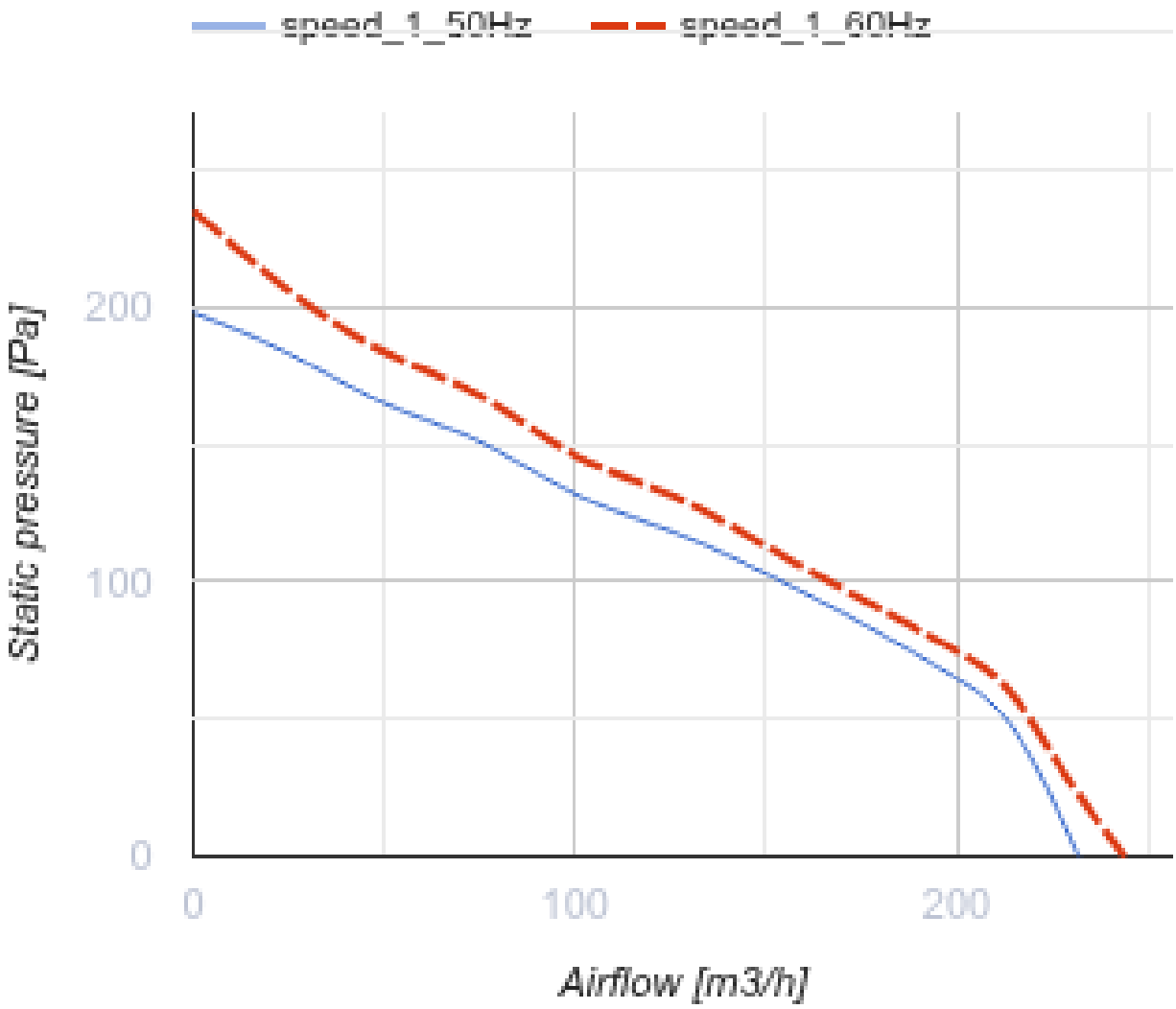
speed_1_50Hz
speed_1_60Hz
Static pressure [Pa]
200
100
0
0
100
200
Airflow [m3/h]

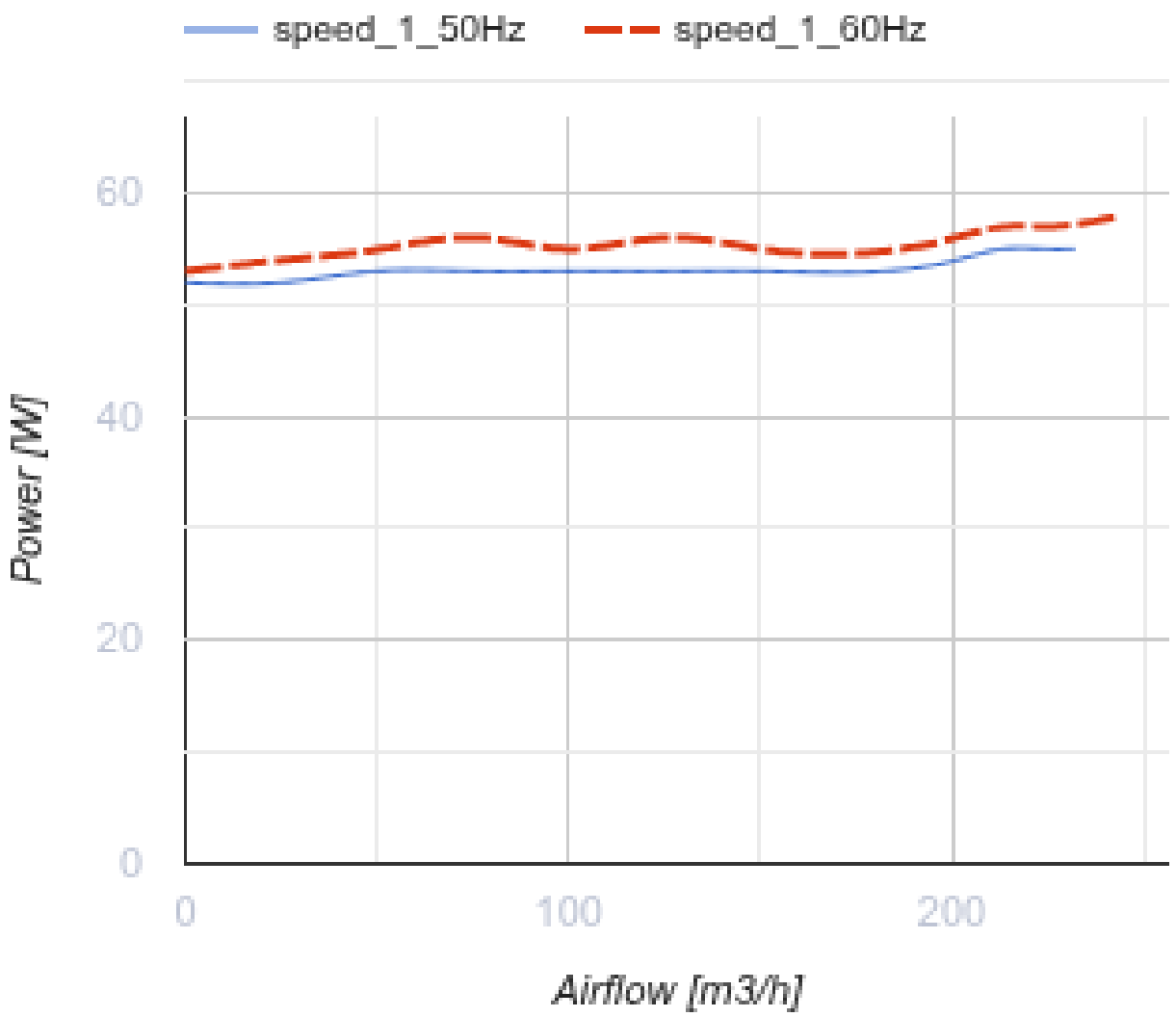

Dimensions

ØD	B	H	H1	L
125	240	160	189	305

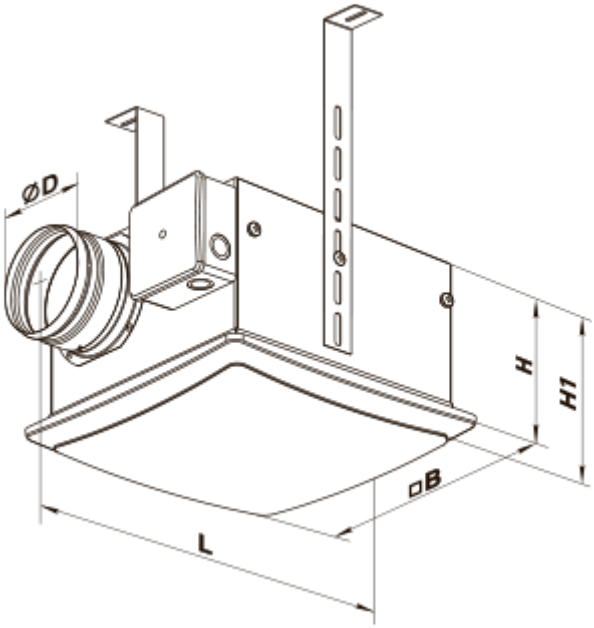
ØD
H
H1
□B
L

Ecodesign

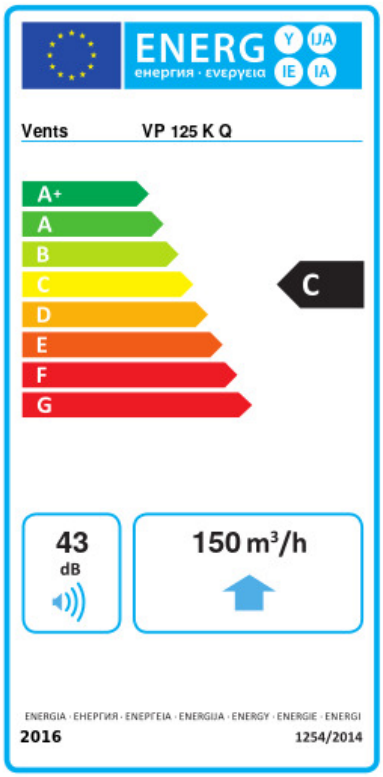

Trademark	Vents					
Model	VP 125 K Q					
Specific energy consumption (SEC) (kWh/(m²/a))	Cold		Average		Warm	
	-51.5	A+	-24.4	C	-8.9	F
Type of ventilation unit	Unidirectional					
Type of drive installed	Variable speed					
Type of heat recovery system	None					
Maximum flow rate (m³/h)	150					
Electric power input (W)	56					
Reference flow rate (m³/s)	0.029					
Reference pressure difference (Pa)	50					
Specific power input (SPI) (W/(m³/h))	0.293					
Control typology	Local demand control					
Maximum external leakage rates (%)	2.7					
Declared typology	RVU UVU					
Sound power level (dB(A))	43					
The annual electricity consumption (AEC) (kWh/a)	Cold		Average		Warm	
	155		155		155	
The annual heating saved (AHS) (kWh/a)	Cold		Average		Warm	
	5536		2830		1280	