VOK1 200

Roof axial fans with aluminium impellers

- Sound pressure level LpA at 3 m: 32
- Impeller type: Axial
- Casing material: Coated steel

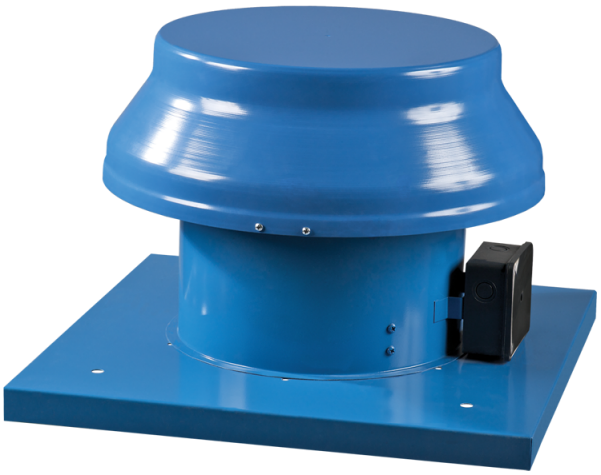

	Unit of measurement	VOK1 200
Connected air duct size	mm	200
Phases	-	1
Minimum supply voltage	V	220
Maximum supply voltage	V	240
Power supply frequency	Hz	50/60
Rated power	W	43
Unit current	A	0.28
Maximum airflow	m³/h	405
Rotation speed at 50hz	-	1300
Sound pressure level LpA at 3 m	dB(A)	32
Weight	kg	6.1
Transported air temperature (max)	°C	40
Ingress protection rating	-	IP24
Ingress protection rating of the drive	-	IP44
Impeller material	-	Aluminium
Size	mm	200

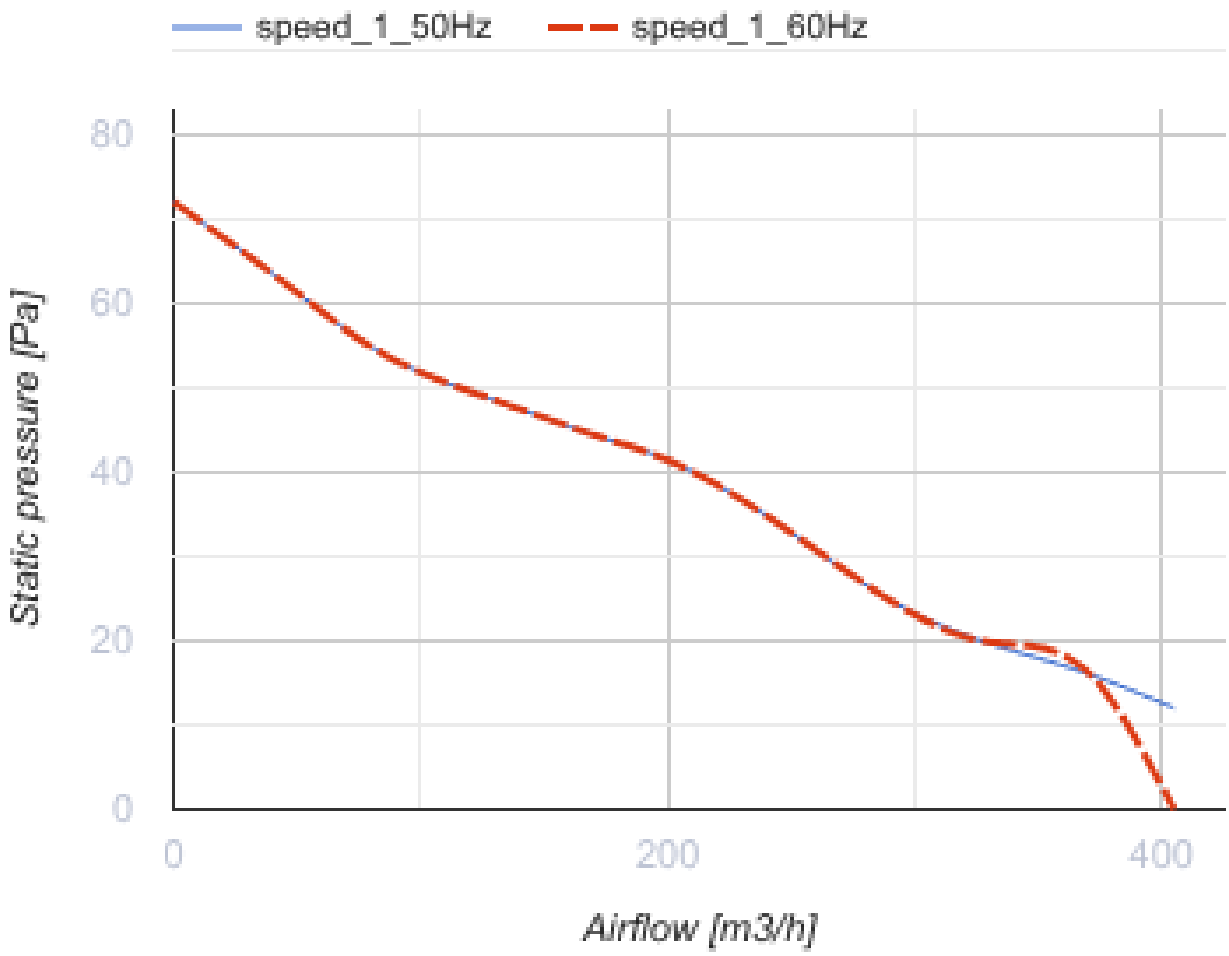
speed_1_50Hz
speed_1_60Hz
80
60
40
20
0
Static pressure [Pa]
0
200
400
Airflow [m3/h]

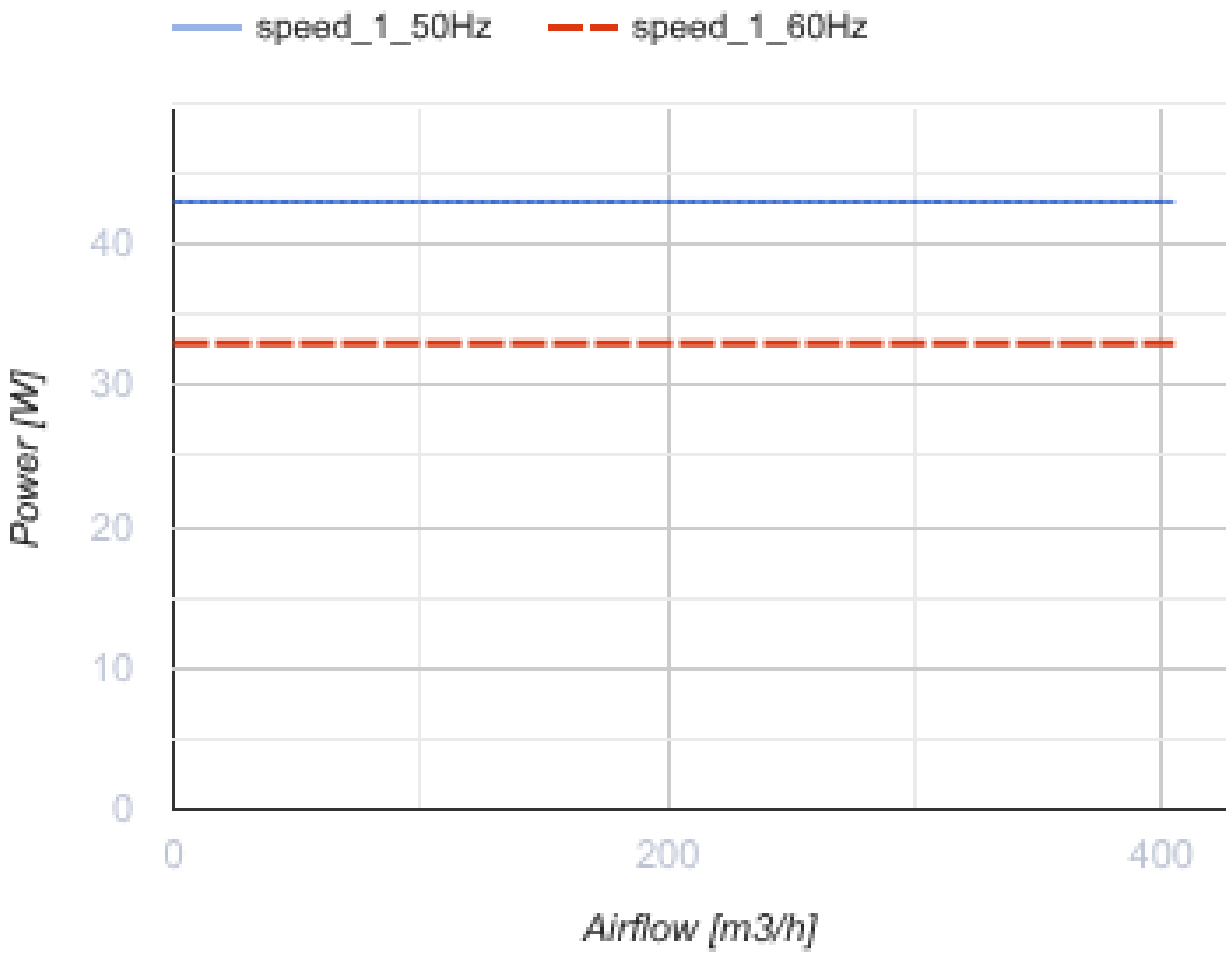

Dimensions

ØD	ØD1	H	L	L1
208	345	280	425	330

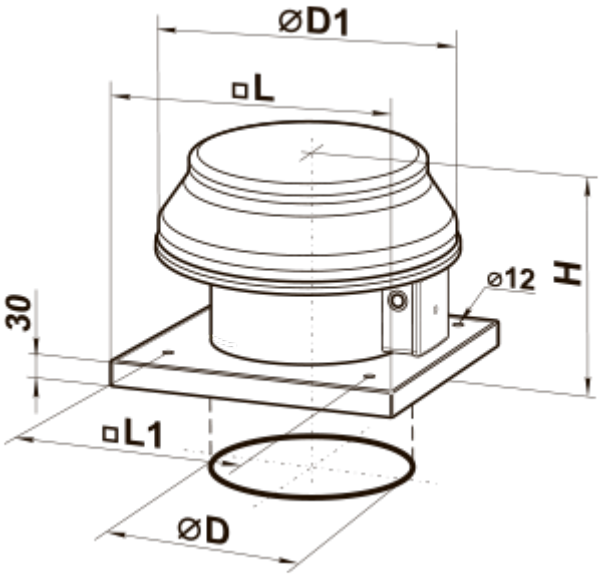

Accessories

Speed controllers

Name	Photo	Description
RSA5E-3,5-T		Speed controllers are applied for air flow control of single phase fans by means of motor step speed control
RSA5E-5,0-T		Speed controllers are applied for air flow control of single phase fans by means of motor step speed control
RSA5E-7,5-T		Speed controllers are applied for air flow control of single phase fans by means of motor step speed control

Accessories for roof fans

Name	Photo	Description
RKV 220-225		Mounting frame
RKVI 220-225		Mounting frame with thermal-insulating layer

Ecodesign

Trademark	Vents
Model	VOK1 200
Type of drive installed	External MSD or VSD
Type of heat recovery system	None
Nominal external pressure (Pa)	44
Maximum external leakage rates (%)	2.7
Static efficiency (%)	6.9
Declared typology	NRVU UVU
Effective electric power input (kW)	0.032
Sound power level (dB(A))	52