VOK 4E 350

Roof axial fans

- Sound pressure level LpA at 3 m: 62
- Impeller type: Axial
- Casing material: Coated steel

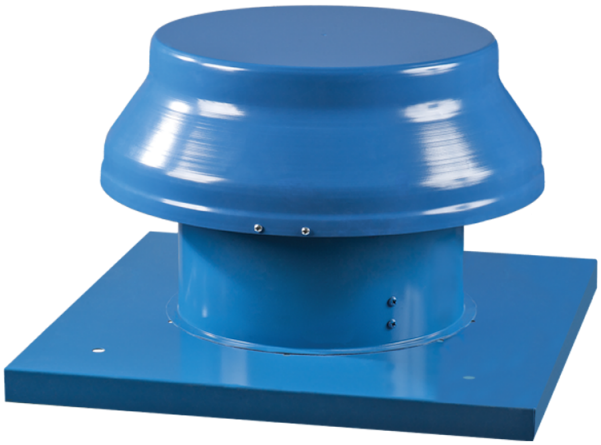

	Unit of measurement	VOK 4E 350
Connected air duct size	mm	350
Phases	-	1
Minimum supply voltage	V	220
Maximum supply voltage	V	240
Power supply frequency	Hz	50/60
Rated power	W	140
Unit current	A	0.65
Maximum airflow	m³/h	2500
Rotation speed at 50hz	-	1380
Sound pressure level LpA at 3 m	dB(A)	62
Weight	kg	12
Transported air temperature (max)	°C	60
Transported air temperature (min)	°C	-30
Ingress protection rating	-	IP24
Ingress protection rating of the drive	-	IP44
Impeller material	-	Coated steel
Size	mm	350

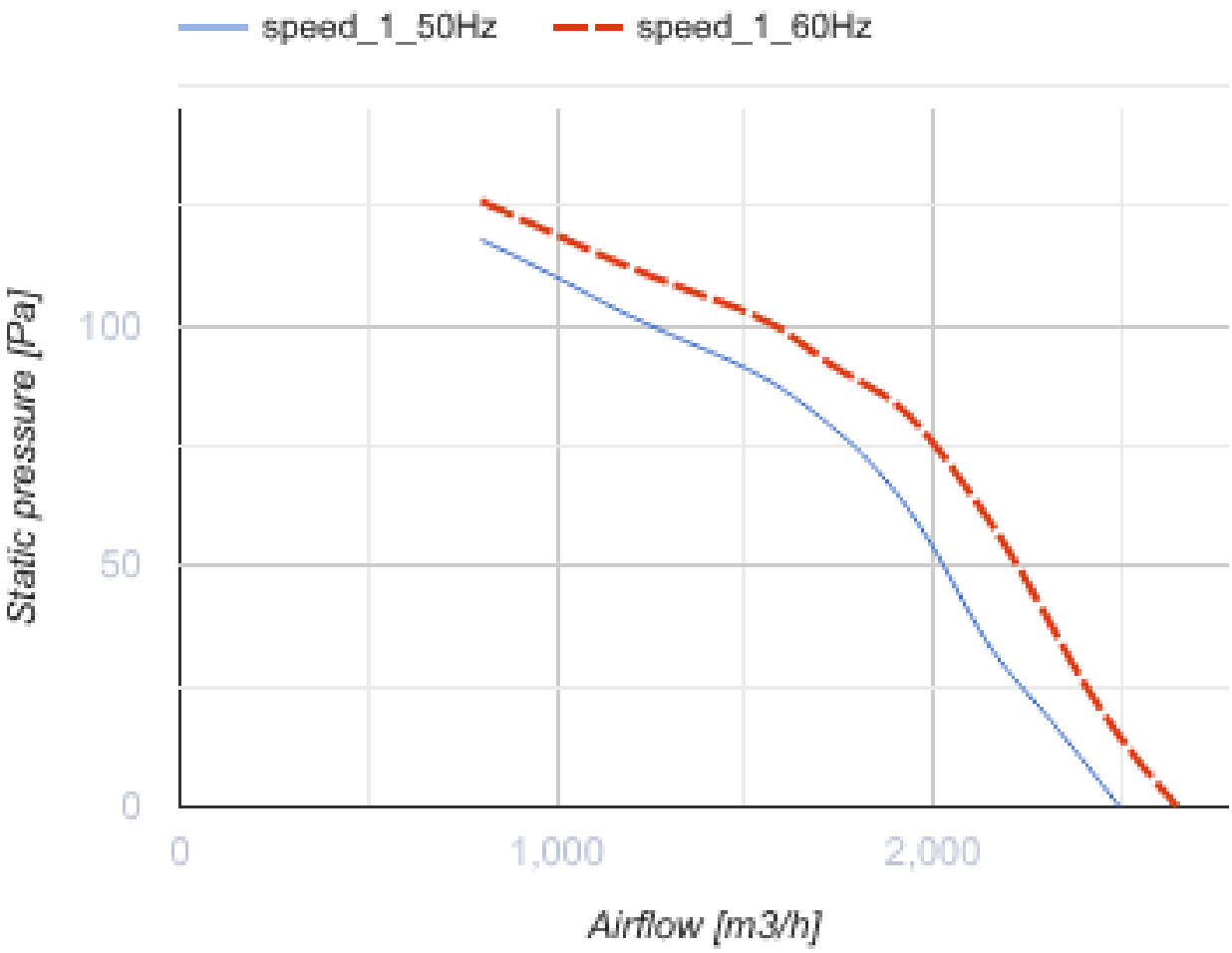
speed_1_50Hz
speed_1_60Hz
Static pressure [Pa]
100
50
0
0
1,000
2,000
Airflow [m3/h]

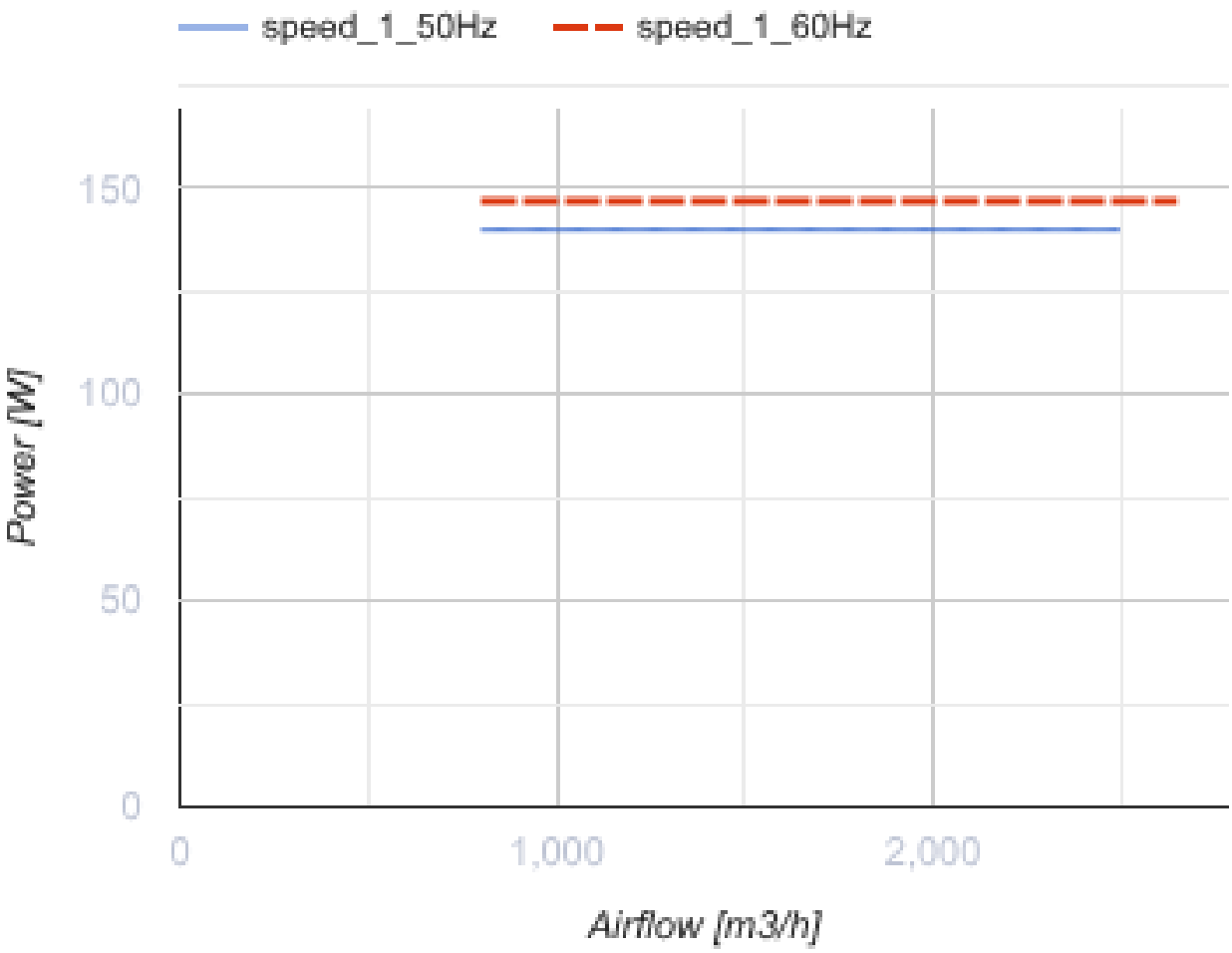

Dimensions

ØD	ØD1	H	L	L1
364	555	350	655	535

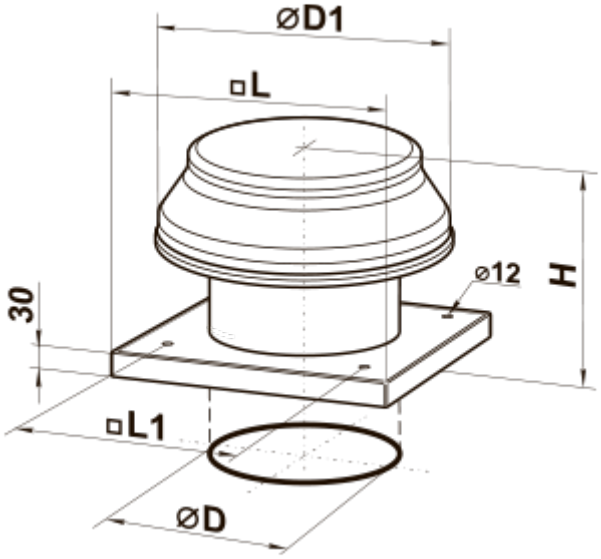

Accessories

Speed controllers

Name	Photo	Description
RSA5E-3,5-T		Speed controllers are applied for air flow control of single phase fans by means of motor step speed control
RSA5E-5,0-T		Speed controllers are applied for air flow control of single phase fans by means of motor step speed control
RSA5E-7,5-T		Speed controllers are applied for air flow control of single phase fans by means of motor step speed control

Ecodesign

Trademark	Vents
Model	VOK 4E 350
Type of drive installed	External MSD or VSD
Type of heat recovery system	None
Nominal external pressure (Pa)	80
Maximum external leakage rates (%)	2.7
Static efficiency (%)	29.9
Declared typology	NRVU UVU
Effective electric power input (kW)	0.13
Sound power level (dB(A))	82