# VNV-1E 80 KV2 H



Centrifugal high-resistance fans in a plastic casing with vertical air discharge

- Sound pressure level LpA at 3 m: 38
- Control: Wired control panel
- Casing material: Plastic
- Backdraft protection: Backdraft damper
- Humidity sensor: Built-in

| | Unit of measurement | VNV-1E 80 KV2 H | |
|---|---|---|---|
| Speed | - | 1 | 2 |
| Connected air duct size | mm | 80 | |
| Phases | - | 1 | |
| Minimum supply voltage | V | 220 | |
| Maximum supply voltage | V | 240 | |
| Power supply frequency | Hz | 50 | |
| Rated power | W | 24 | 29 |
| Unit current | A | 0.11 | 0.13 |
| Maximum airflow | m³/h | 75 | 100 |
| Sound pressure level LpA at 3 m | dB(A) | 29 | 38 |
| Weight | kg | 2.7 | |
| Ambient air temperature min | °C | 1 | |
| Ambient air temperature max | °C | 40 | |
| Ingress protection rating | - | IP55 | |

## Dimensions

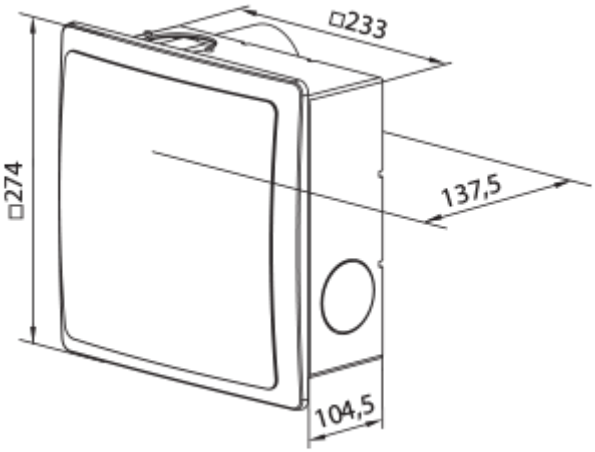


## Accessories

### Fittings

| Name | Photo | Description |
|---|---|---|
| PVT 050/10 |  | The adhesive PVC tape is an insulation tape made of plasticized PVC base covered with a glue layer |
| PVT 050/30 |  | The adhesive PVC tape is an insulation tape made of plasticized PVC base covered with a glue layer |
| PVT 050/50 |  | The adhesive PVC tape is an insulation tape made of plasticized PVC base covered with a glue layer |

### Flexible ducts

| Name | Photo | Description |
|---|---|---|
| Polyvent N |  | Flexible uninsulated air duct made of metallized film |

### Window vents

| Name | Photo | Description |
|---|---|---|
| PO 400 |  | Window ventilators for supply ventilation |