# VNV-1A 80 KP-D TR



Flush-mounted centrifugal high-resistance fans in a flameproof casing with vertical air discharge

- Sound pressure level LpA at 3 m: 36
- Control: Wired control panel
- Casing material: Plastic
- Backdraft protection: Backdraft damper
- Motion sensor
- Humidity sensor: Built-in
- Timer: Built-in

| | Unit of measurement | VNV-1A 80 KP-D TR | |
|---|---|---|---|
| Speed | - | 1 | 2 |
| Connected air duct size | mm | 80 | |
| Phases | - | 1 | |
| Minimum supply voltage | V | 220 | |
| Maximum supply voltage | V | 240 | |
| Power supply frequency | Hz | 50 | |
| Rated power | W | 15 | 25 |
| Unit current | A | 0.12 | 0.14 |
| Maximum airflow | $m^3/h$ | 35 | 63 |
| Rotation speed at 50hz | - | 890 | 1350 |
| Sound pressure level LpA at 3 m | dB(A) | 27 | 36 |
| Weight | kg | 2.7 | |
| Ambient air temperature min | °C | 1 | |
| Ambient air temperature max | °C | 40 | |
| Ingress protection rating | - | IP55 | |

## Dimensions

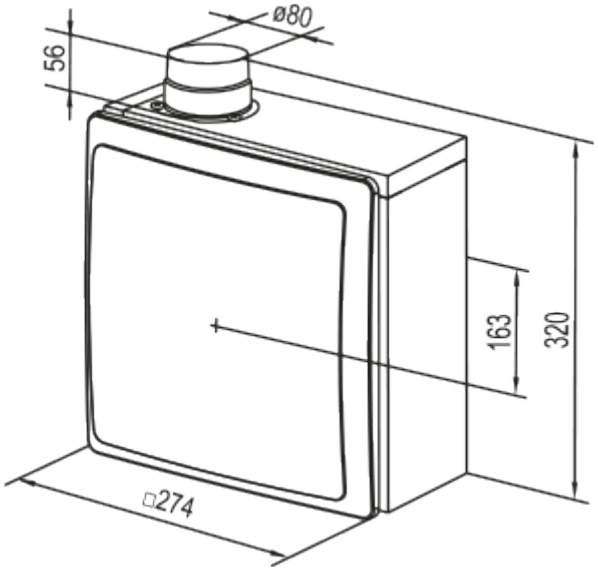


## Accessories

### Fittings

| Name | Photo | Description |
|---|---|---|
| PVT 050/10 |  | The adhesive PVC tape is an insulation tape made of plasticized PVC base covered with a glue layer |
| PVT 050/30 |  | The adhesive PVC tape is an insulation tape made of plasticized PVC base covered with a glue layer |
| PVT 050/50 |  | The adhesive PVC tape is an insulation tape made of plasticized PVC base covered with a glue layer |

### Flexible ducts

| Name | Photo | Description |
|---|---|---|
| Polyvent N |  | Flexible uninsulated air duct made of metallized film |

### Mono-pipe

| Name | Photo | Description |
|---|---|---|
| KP-D 80 |  | Fireproof casing for ventilation unit VNV-1 80 |

### Window vents

| Name | Photo | Description |
|---|---|---|

| | | |
|---|---|---|
| PO 400 |  | Window ventilators for supply ventilation |