VKVz 6E 560

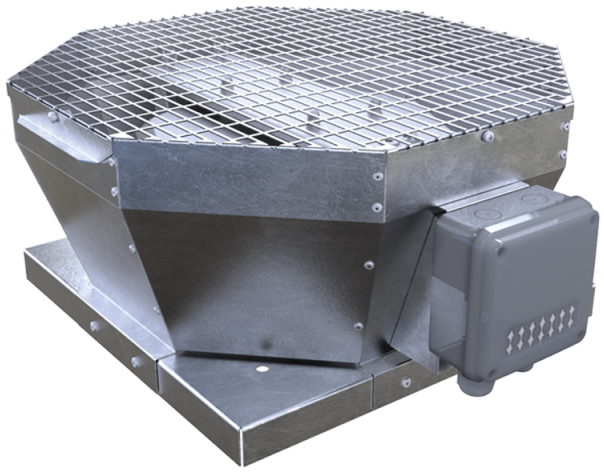

Roof centrifugal fans with vertical air discharge

• Sound pressure level LpA at 3 m: 58
• Impeller type: Centrifugal impeller with backward curved blades
• Casing material: Galvanized steel

	Unit of measurement	VKVz 6E 560
Phases	-	1
Minimum supply voltage	V	230
Maximum supply voltage	V	230
Power supply frequency	Hz	50
Rated power	W	613
Unit current	A	2.7
Maximum airflow	m^3/h	9560
Rotation speed at 50hz	-	930
Sound pressure level LpA at 3 m	dB(A)	58
Weight	kg	63
Transported air temperature (max)	°C	50
Transported air temperature (min)	°C	-25
Ingress protection rating	-	IPX4
Ingress protection rating of the drive	-	IP54
Impeller material	-	Aluminium
Size	mm	560

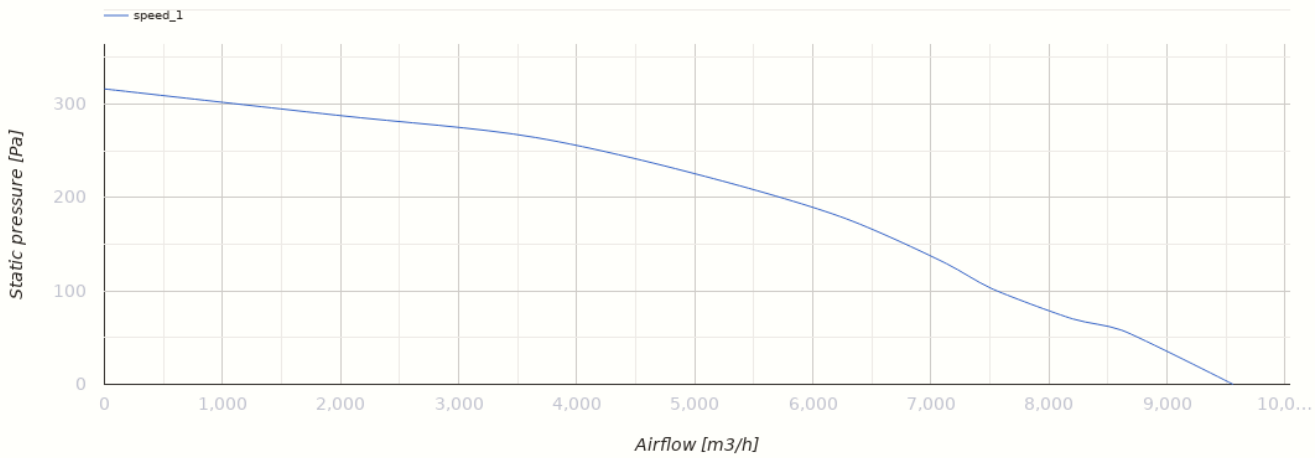

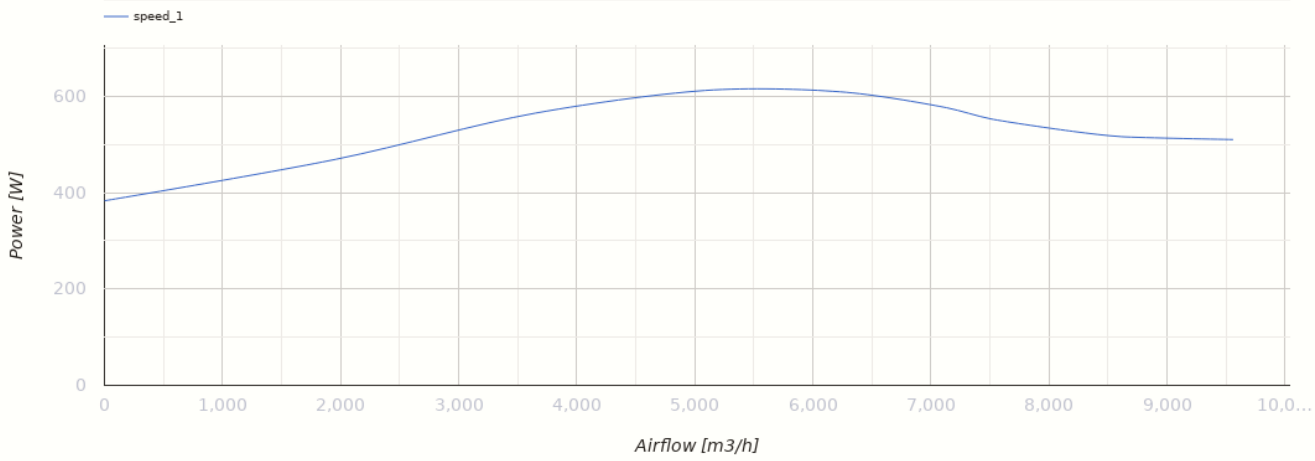

Dimensions

A	B	H	ØD
859	833	485	605

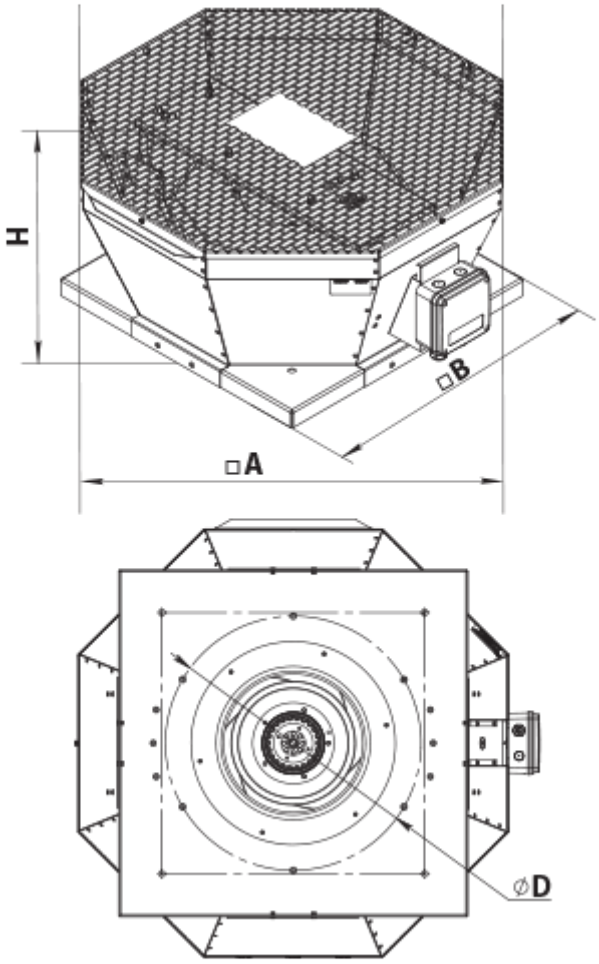

Accessories

Accessories for roof fans

Name	Photo	Description
RKV 560		Mounting frame
RKVI 560		Mounting frame with thermal-insulating layer
FKV 560		Mating flange
GKV 560		Flexible connector
KKV 560		Backdraft damper

Ecodesign

Trademark	Vents
Model	VKVz 6E 560
Type of drive installed	External MSD or VSD
Type of heat recovery system	None
Nominal external pressure (Pa)	220
Maximum external leakage rates (%)	2.7
Static efficiency (%)	52.5
Declared typology	NRVU UVU
Effective electric power input (kW)	0.613
Sound power level (dB(A))	78