VKVz 6D 710

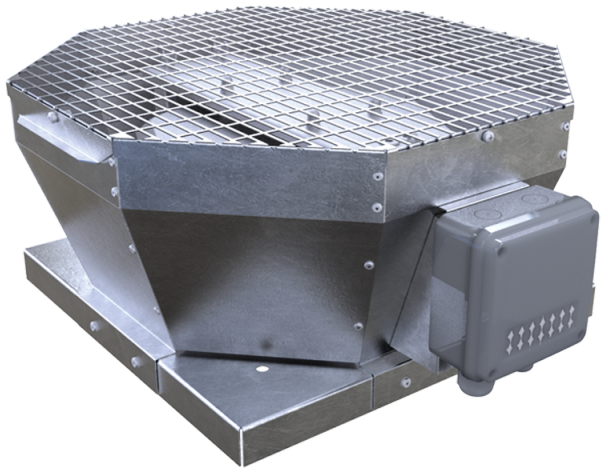

Roof centrifugal fans with vertical air discharge

• Sound pressure level LpA at 3 m: 67
• Impeller type: Centrifugal impeller with backward curved blades
• Casing material: Galvanized steel

	Unit of measurement	VKVz 6D 710
Phases	-	3
Maximum supply voltage	V	400
Minimum supply voltage	V	400
Power supply frequency	Hz	50
Rated power	W	2583
Unit current	A	4.87
Maximum airflow	m^3/h	17010
Rotation speed at 50hz	-	945
Sound pressure level LpA at 3 m	dB(A)	67
Weight	kg	114
Transported air temperature (max)	°C	70
Transported air temperature (min)	°C	-25
Ingress protection rating	-	IPX4
Ingress protection rating of the drive	-	IP54
Impeller material	-	Aluminium
Size	mm	710

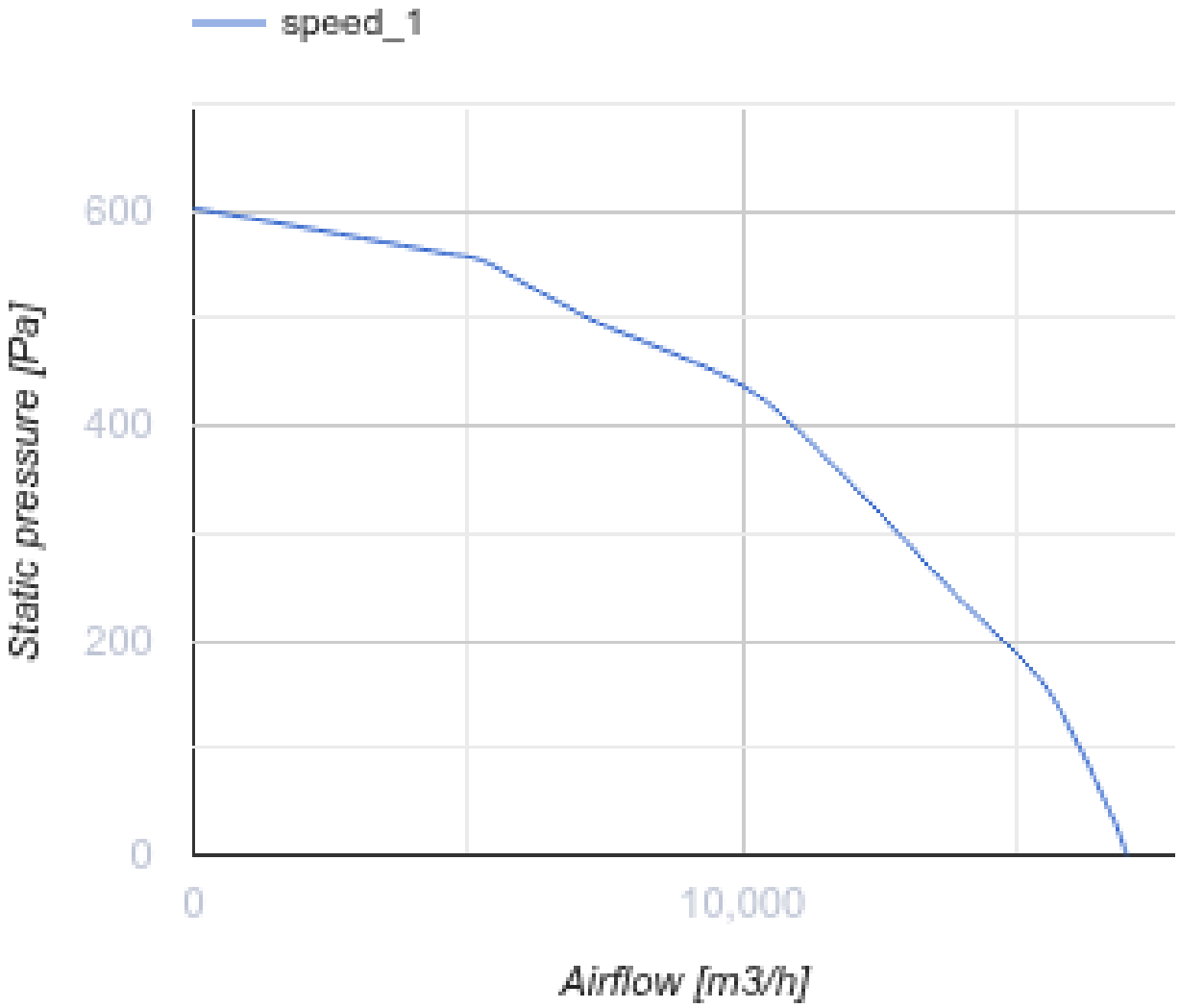
speed_1
600
400
200
0
Static pressure [Pa]
0
10,000
Airflow [m3/h]

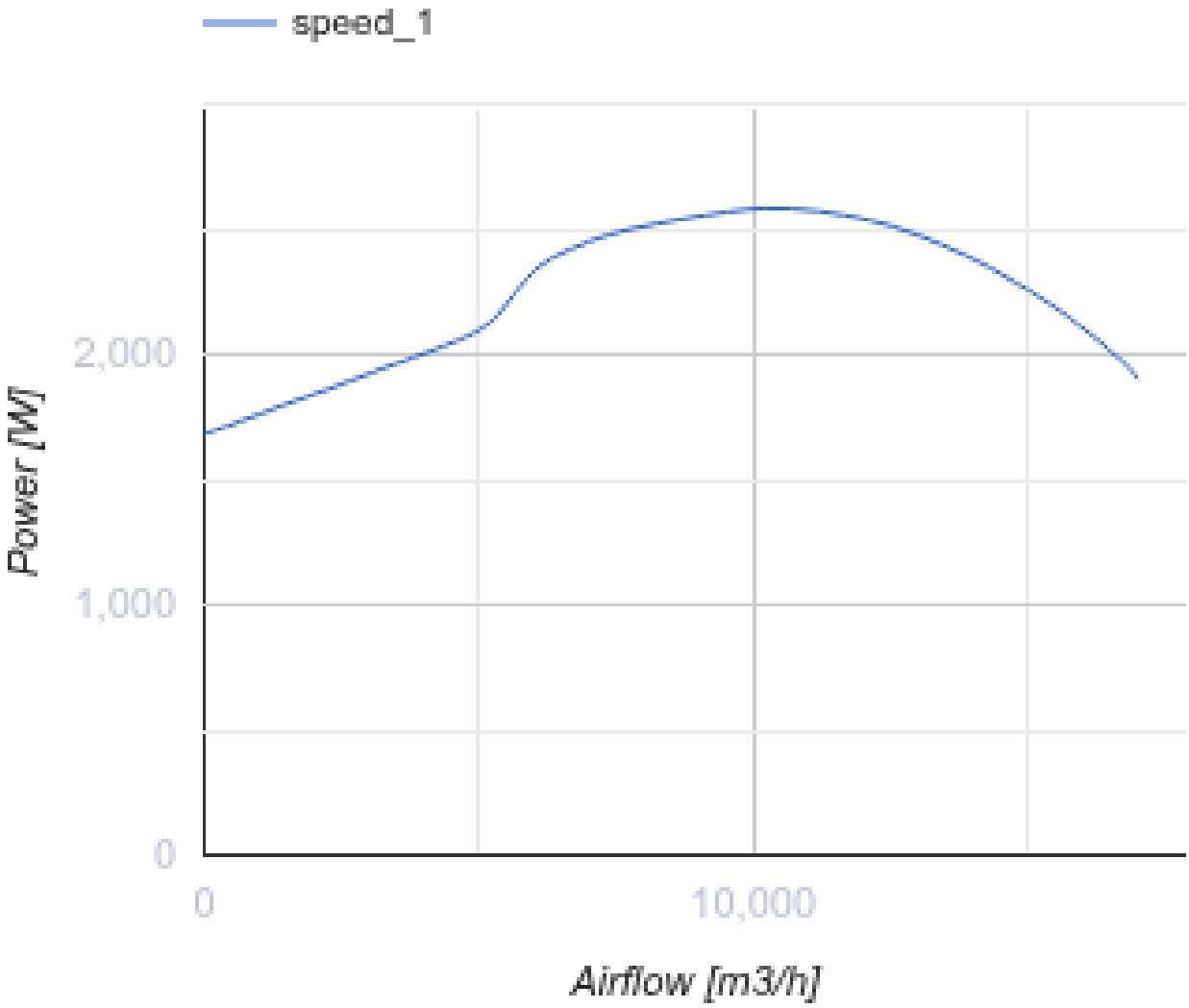

Dimensions

A	B	H	ØD
992	980	485	674

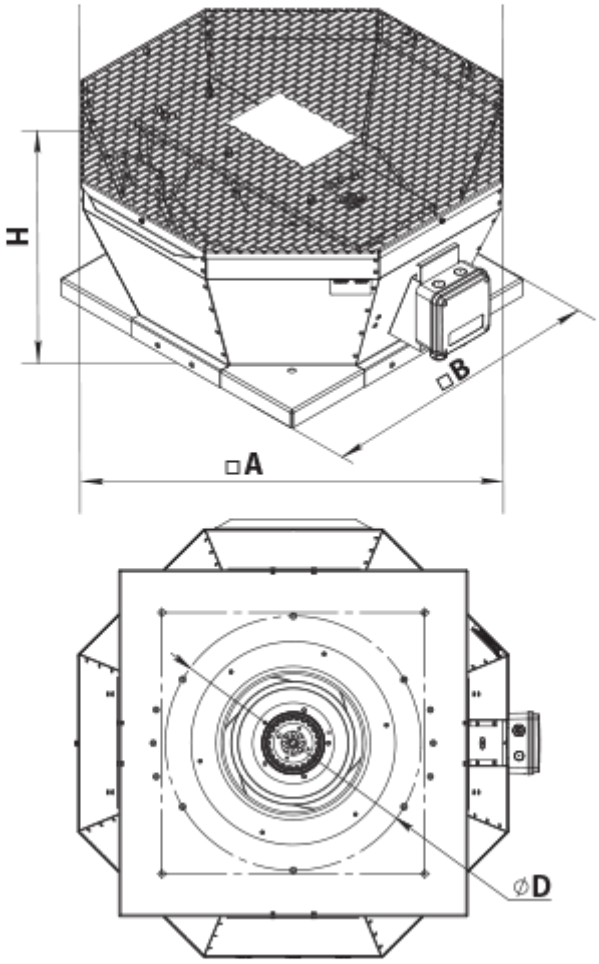

Accessories

Speed controllers

Name	Photo	Description
RSA5D-6,0-M		Three phase speed controller

Accessories for roof fans

Name	Photo	Description
RKV 710, 800		Mounting frame
RKVI 710, 800		Mounting frame with thermal-insulating layer
FKV 710		Mating flange

GKV 710		Flexible connector
KKV 710		Backdraft damper

Ecodesign

Trademark	Vents
Model	VKVz 6D 710
Type of drive installed	External MSD or VSD
Type of heat recovery system	None
Nominal external pressure (Pa)	431
Maximum external leakage rates (%)	2.7
Static efficiency (%)	48.2
Declared typology	NRVU UVU
Sound power level (dB(A))	87
Effective electric power input (kW)	2.583