VKVz 630 EC

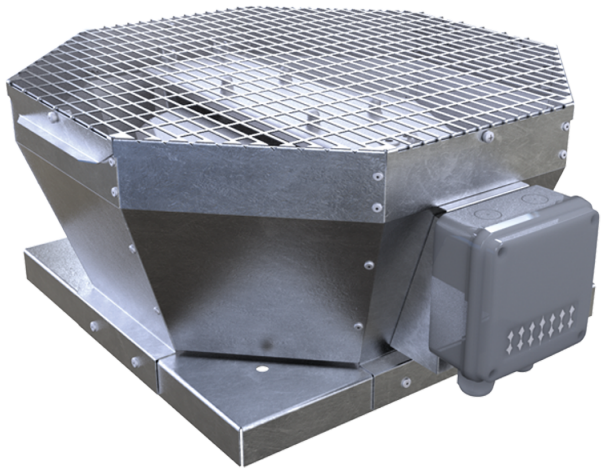

Roof centrifugal fans with vertical air discharge with EC-motors

• Sound pressure level LpA at 3 m: 71
• Impeller type: Centrifugal impeller with backward curved blades
• Casing material: Galvanized steel

	Unit of measurement	VKVz 630 EC
Phases	-	3
Minimum supply voltage	V	400
Maximum supply voltage	V	400
Power supply frequency	Hz	50/60
Rated power	W	2973
Unit current	A	4.66
Maximum airflow	m³/h	18270
Rotation speed at 50hz	-	1450
Sound pressure level LpA at 3 m	dB(A)	71
Weight	kg	101
Transported air temperature (max)	°C	55
Transported air temperature (min)	°C	-25
Ingress protection rating	-	IPX4
Ingress protection rating of the drive	-	IP54
Impeller material	-	Galvanized steel
Size	mm	630

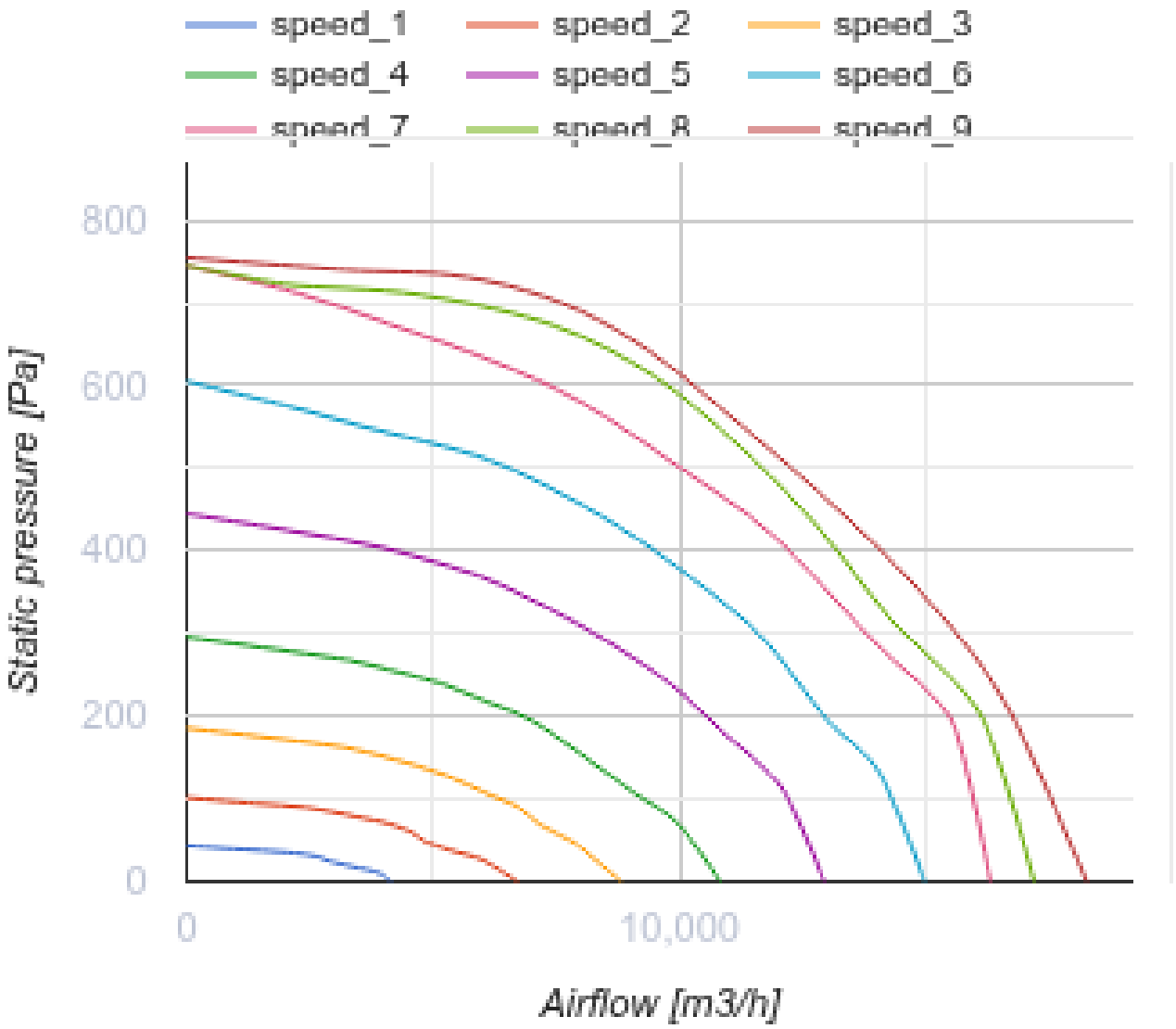
speed_1
speed_2
speed_3
speed_4
speed_5
speed_6
speed_7
speed_8
speed_9
800
600
400
200
0
Static pressure [Pa]
0
10,000
Airflow [m3/h]

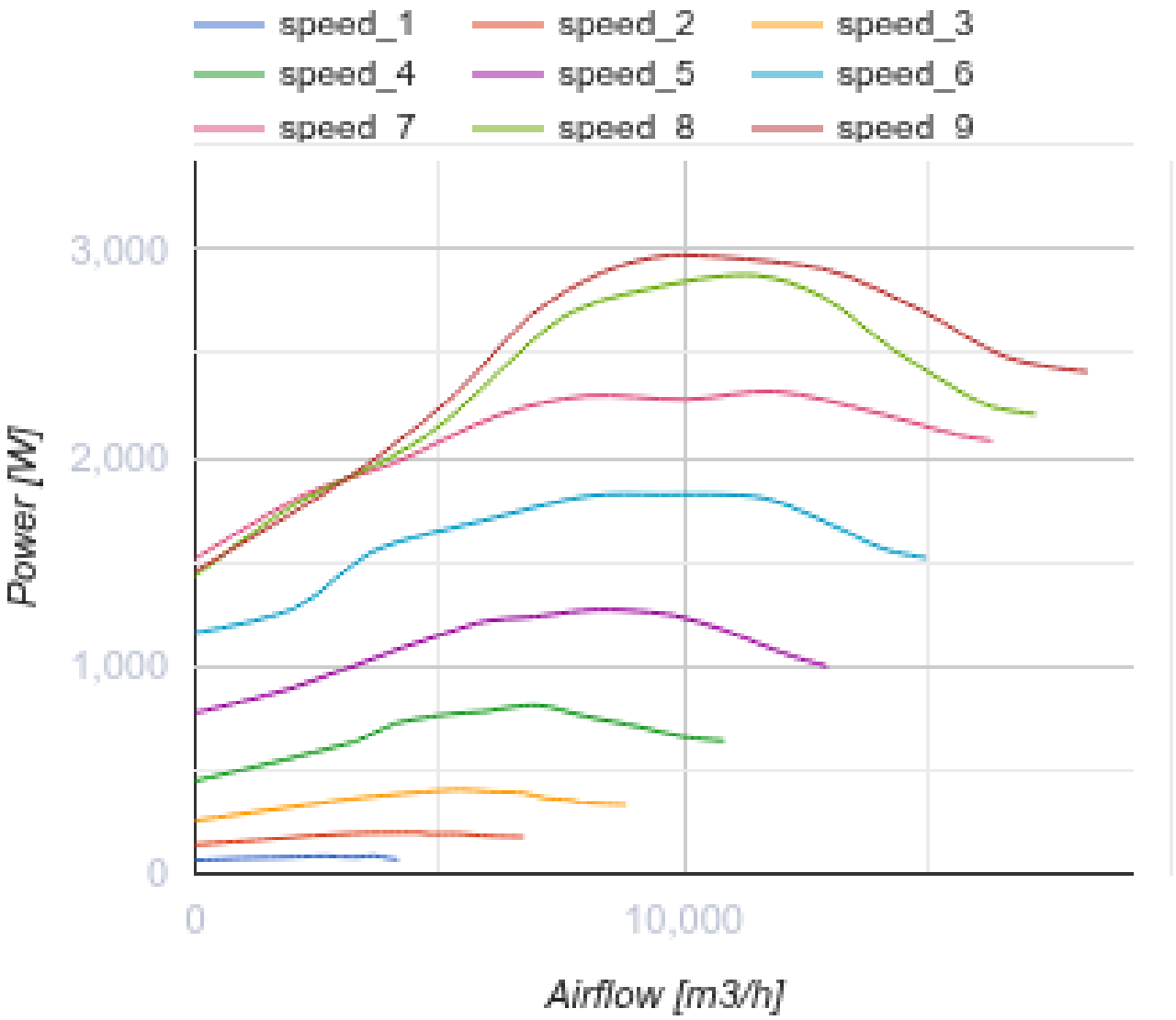

Dimensions

A	B	C
951	890	530

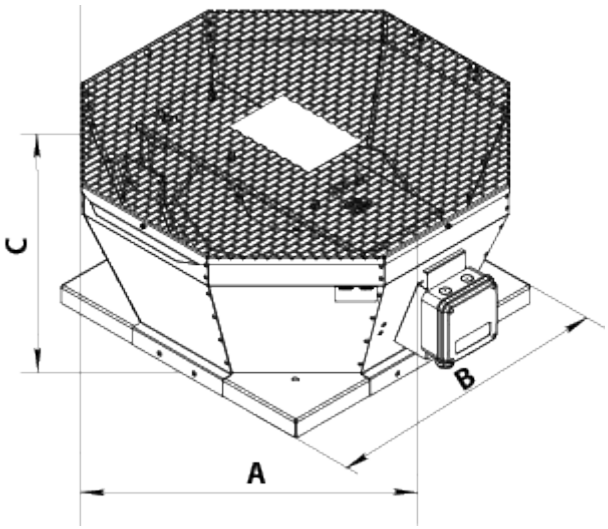

Accessories

Speed controllers

Name	Photo	Description
R-1/010		Speed controller for EC motors

Accessories for roof fans

Name	Photo	Description
RKV 630		Mounting frame
RKVI 630		Mounting frame with thermal-insulating layer
FKV 560		Mating flange
GKV 560		Flexible connector
KKV 560		Backdraft damper

Ecodesign

Trademark	Vents
Model	VKVz 630 EC
Type of drive installed	Integrated VSD
Type of heat recovery system	None
Nominal external pressure (Pa)	465
Maximum external leakage rates (%)	2.7
Static efficiency (%)	62.1
Sound power level (dB(A))	91
Effective electric power input (kW)	2.901
Declared typology	NRVU UVU