VKVz 4D 450

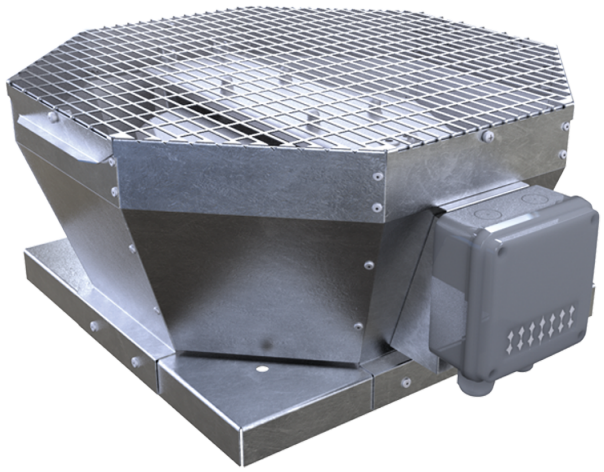

Roof centrifugal fans with vertical air discharge

• Sound pressure level LpA at 3 m: 57
• Impeller type: Centrifugal impeller with backward curved blades
• Casing material: Galvanized steel

	Unit of measurement	VKVz 4D 450
Phases	-	3
Minimum supply voltage	V	400
Maximum supply voltage	V	400
Power supply frequency	Hz	50
Rated power	W	755
Unit current	A	1.5
Maximum airflow	m^3/h	5920
Rotation speed at 50hz	-	1440
Sound pressure level LpA at 3 m	dB(A)	57
Weight	kg	41
Transported air temperature (max)	°C	50
Transported air temperature (min)	°C	-30
Ingress protection rating	-	IPX4
Ingress protection rating of the drive	-	IP54
Impeller material	-	Aluminium
Size	mm	450

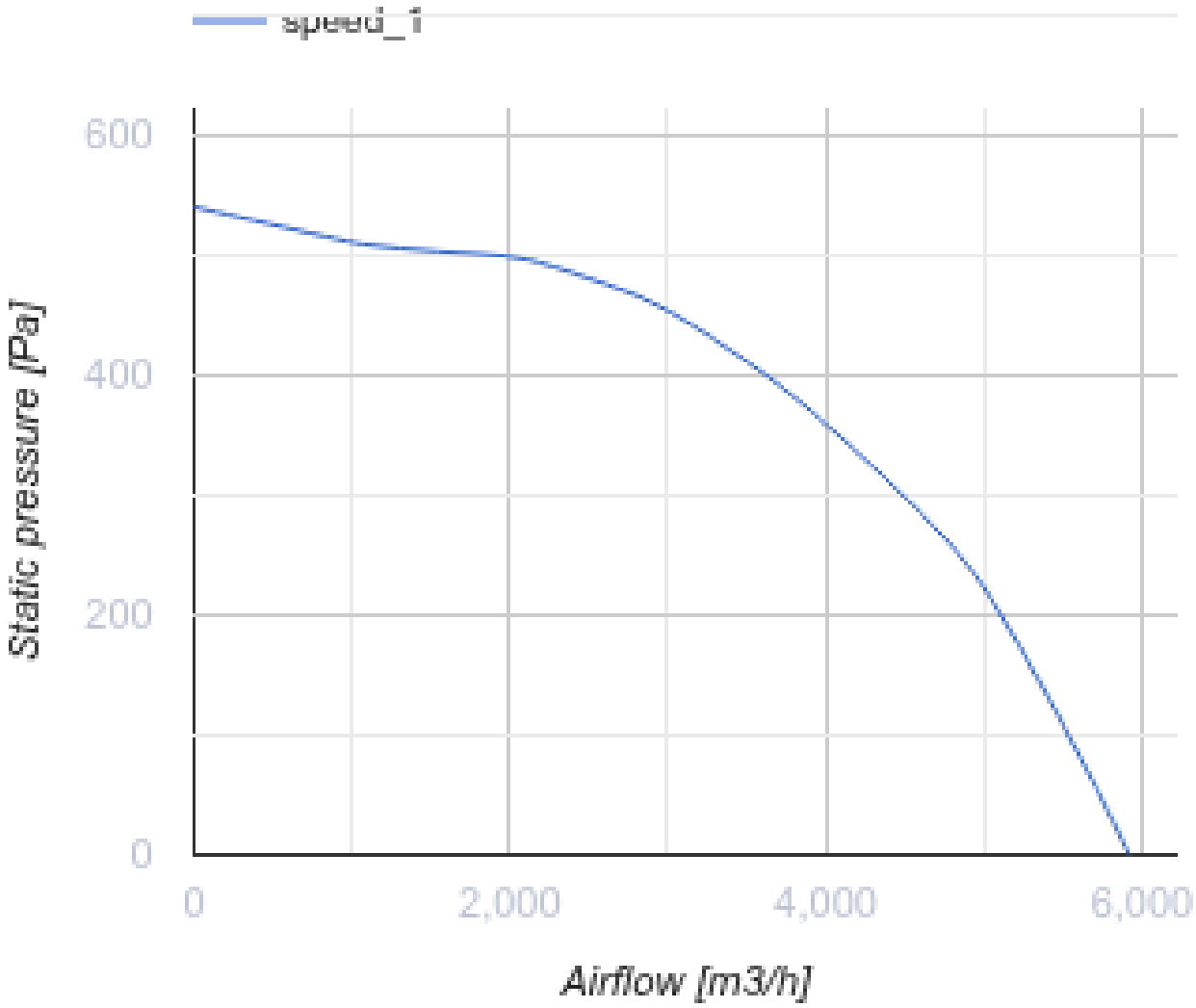
speed_1
600
400
200
0
Static pressure [Pa]
0
2,000
4,000
6,000
Airflow [m3/h]

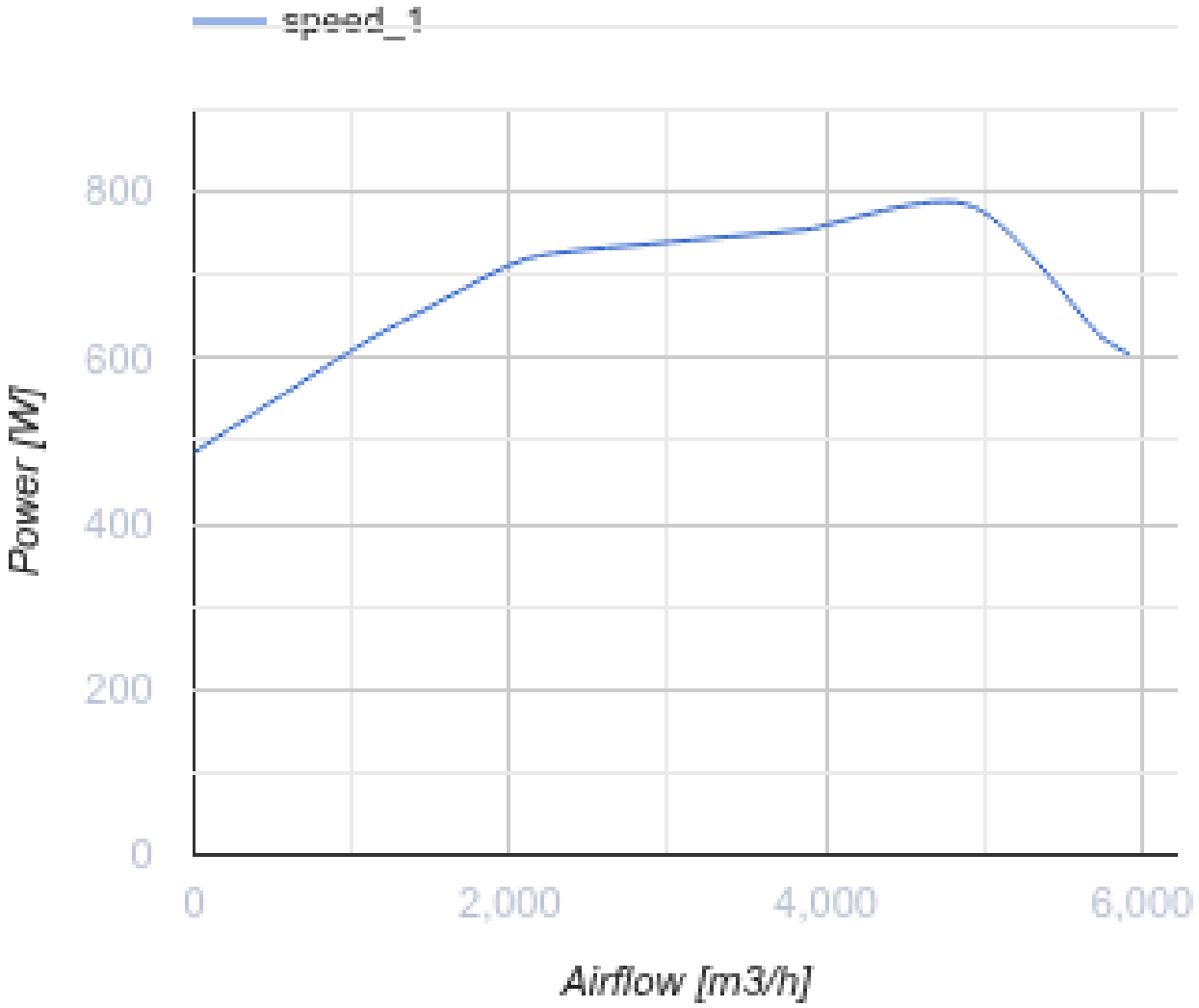

Dimensions

A	B	H	ØD
738	668	425	438

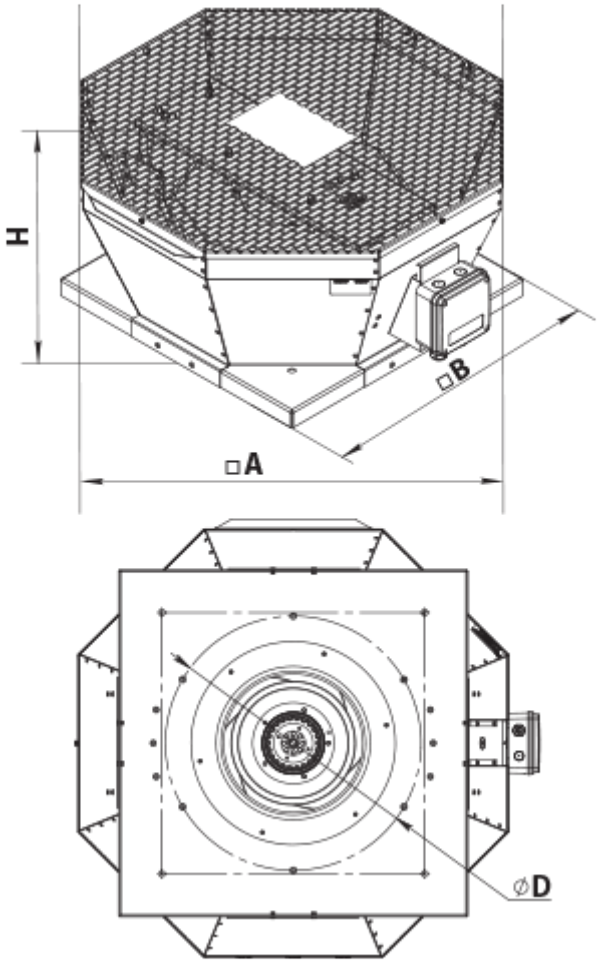

Accessories

Speed controllers

Name	Photo	Description
RSA5D-4,0-M		Three phase speed controller

Accessories for roof fans

Name	Photo	Description
RKV 450-500		Mounting frame
RKVI 450-500		Mounting frame with thermal-insulating layer
FKV 355-500		Mating flange

GKV 355-500		Flexible connector
KKV 355-500		Backdraft damper

Ecodesign

Trademark	Vents
Model	VKVz 4D 450
Type of drive installed	External MSD or VSD
Type of heat recovery system	None
Nominal external pressure (Pa)	373
Maximum external leakage rates (%)	2.7
Static efficiency (%)	54.3
Declared typology	NRVU UVU
Effective electric power input (kW)	0.755
Sound power level (dB(A))	77