VKV 4D 400

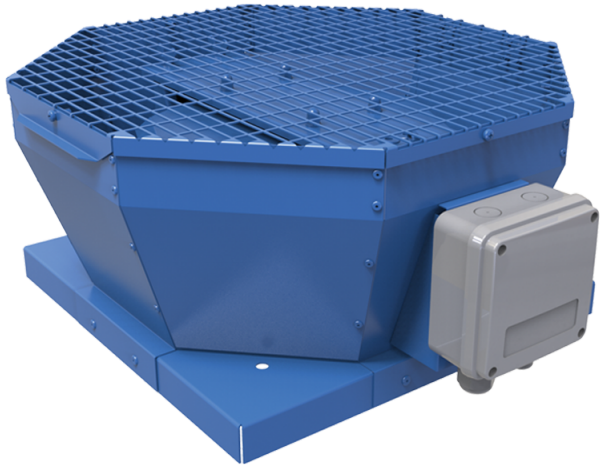

Roof centrifugal fans with vertical air discharge

• Sound pressure level LpA at 3 m: 55
• Impeller type: Centrifugal impeller with backward curved blades
• Casing material: Coated steel

	Unit of measurement	VKV 4D 400
Phases	-	3
Minimum supply voltage	V	400
Maximum supply voltage	V	400
Power supply frequency	Hz	50
Rated power	W	420
Unit current	A	0.99
Maximum airflow	m^3/h	3950
Rotation speed at 50hz	-	1440
Sound pressure level LpA at 3 m	dB(A)	55
Weight	kg	33
Transported air temperature (max)	°C	60
Transported air temperature (min)	°C	-30
Ingress protection rating	-	IPX4
Ingress protection rating of the drive	-	IP54
Impeller material	-	Aluminium
Size	mm	400

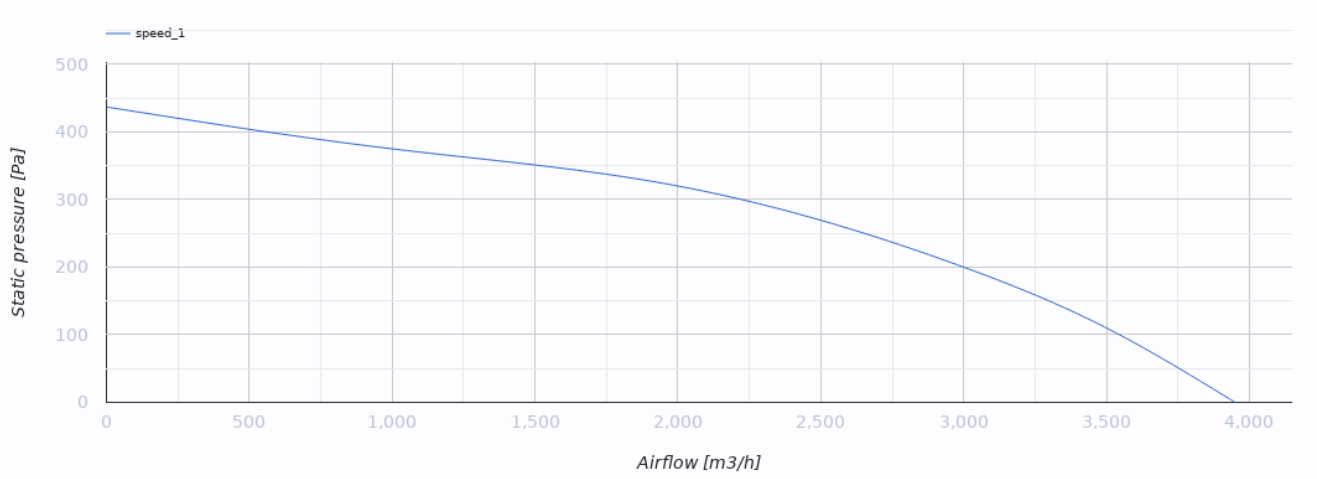

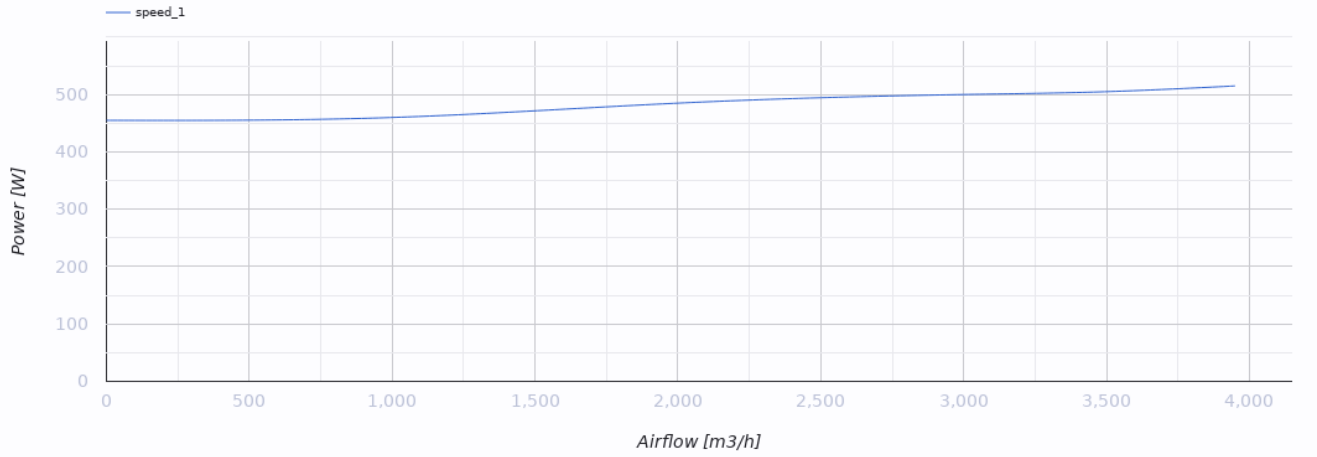

Dimensions

A	B	H	ØD
738	598	375	438

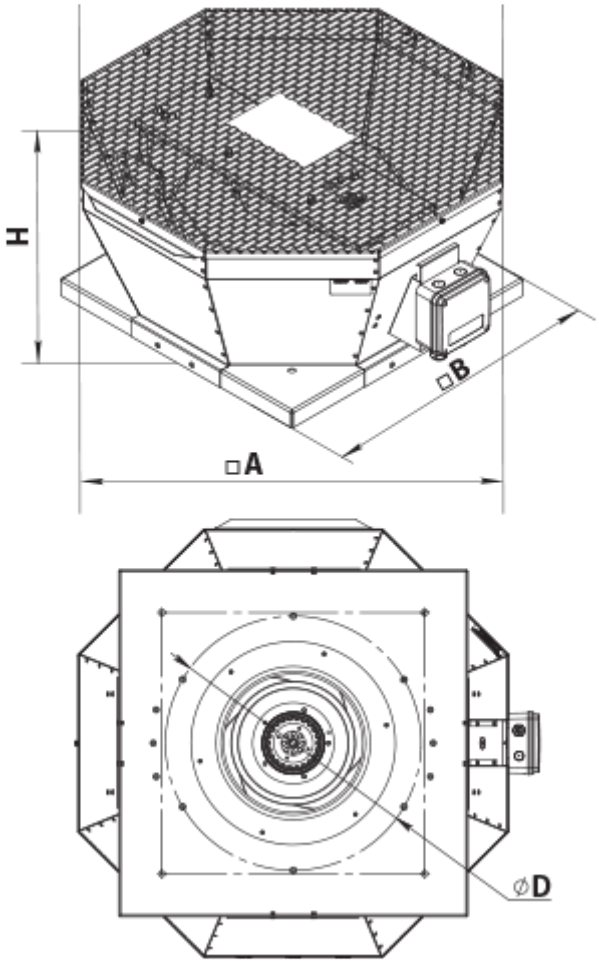

Accessories

Speed controllers

Name	Photo	Description
RSA5D-1,5-M		Three phase speed controller

Accessories for roof fans

Name	Photo	Description
RKV 355-400		Mounting frame
RKVI 355-400		Mounting frame with thermal-insulating layer
FKV 355-500		Mating flange

GKV 355-500		Flexible connector
KKV 355-500		Backdraft damper

Ecodesign

Trademark	Vents
Model	VKV 4D 400
Type of drive installed	External MSD or VSD
Type of heat recovery system	None
Nominal external pressure (Pa)	348
Maximum external leakage rates (%)	2.7
Static efficiency (%)	51.5
Declared typology	NRVU UVU
Effective electric power input (kW)	0.385
Sound power level (dB(A))	72