VKV 225 EC

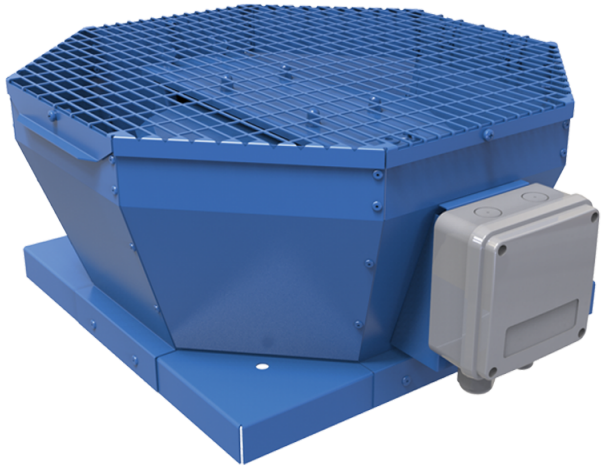

Roof centrifugal fans with vertical air discharge with EC-motors

• Sound pressure level LpA at 3 m: 47
• Impeller type: Centrifugal impeller with backward curved blades
• Casing material: Coated steel

	Unit of measurement	VKV 225 EC
Phases	-	1
Minimum supply voltage	V	230
Maximum supply voltage	V	230
Power supply frequency	Hz	50/60
Rated power	W	101
Unit current	A	0.8
Maximum airflow	m³/h	1290
Rotation speed at 50hz	-	2400
Sound pressure level LpA at 3 m	dB(A)	47
Weight	kg	8
Transported air temperature (max)	°C	60
Transported air temperature (min)	°C	-25
Ingress protection rating	-	IPX4
Ingress protection rating of the drive	-	IP55
Impeller material	-	Galvanized steel
Size	mm	225

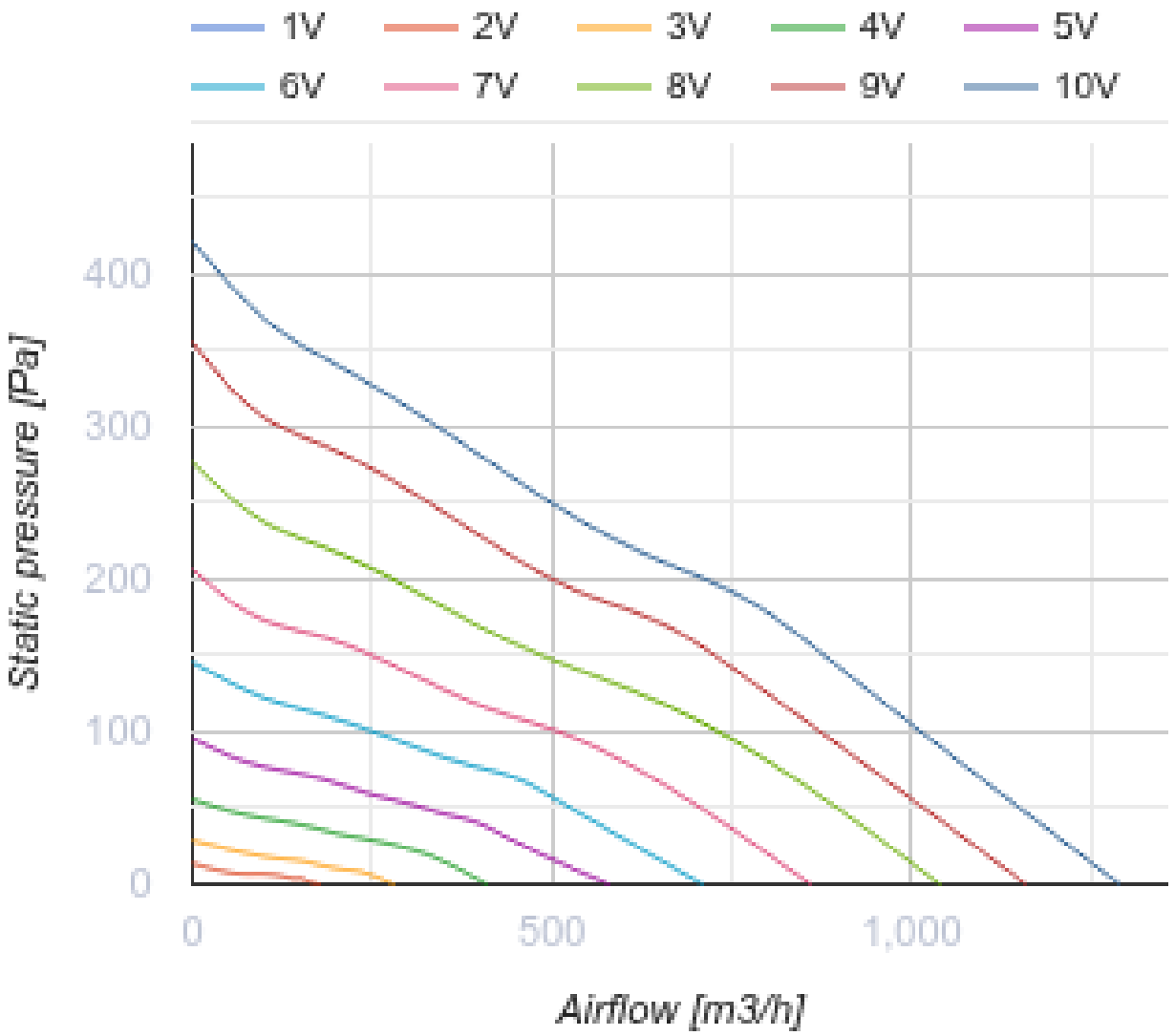
1V
2V
3V
4V
5V
6V
7V
8V
9V
10V
400
300
200
100
0
Static pressure [Pa]
0
500
1,000
Airflow [m3/h]

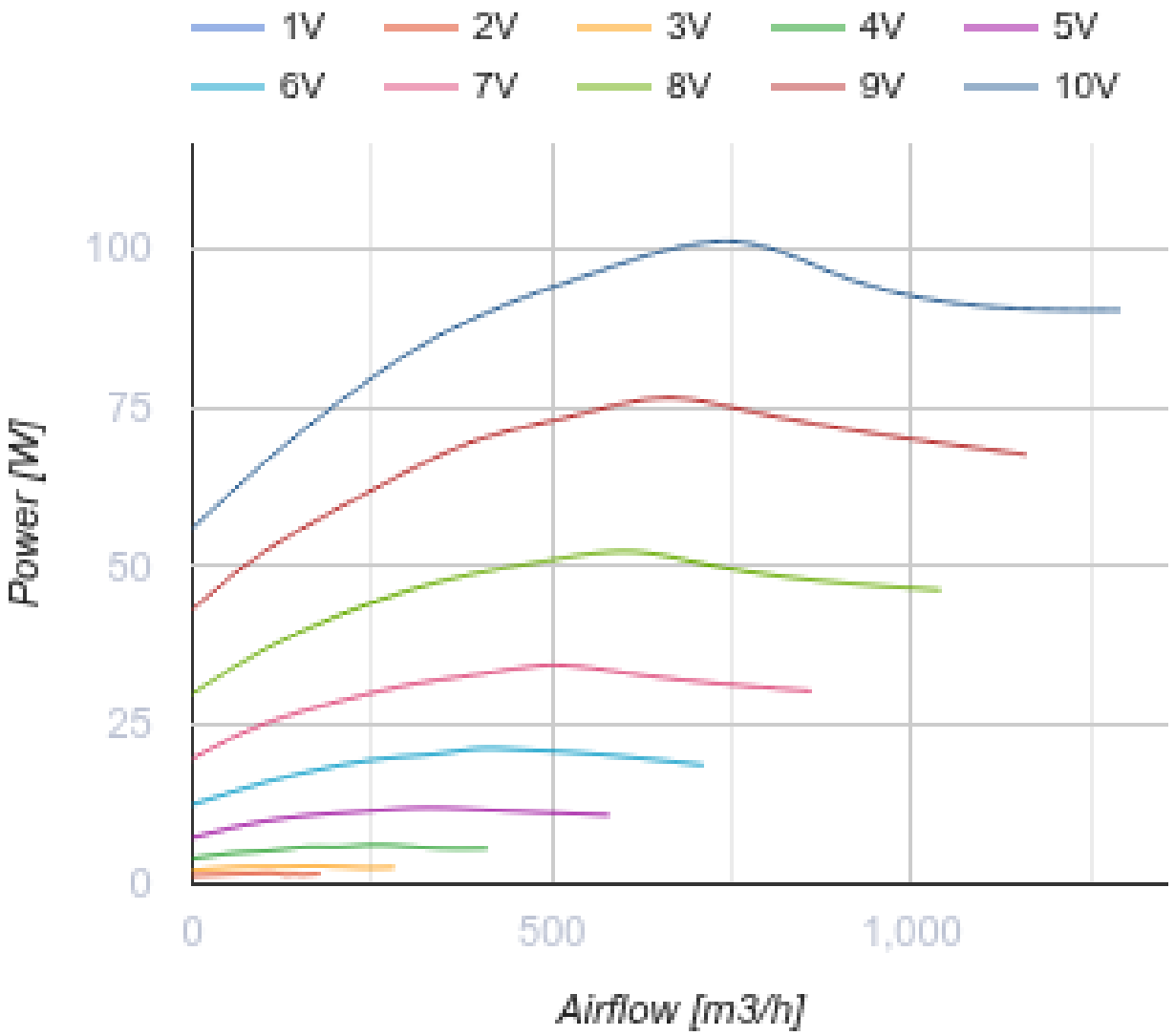

Dimensions

A	B	C
417	355	210

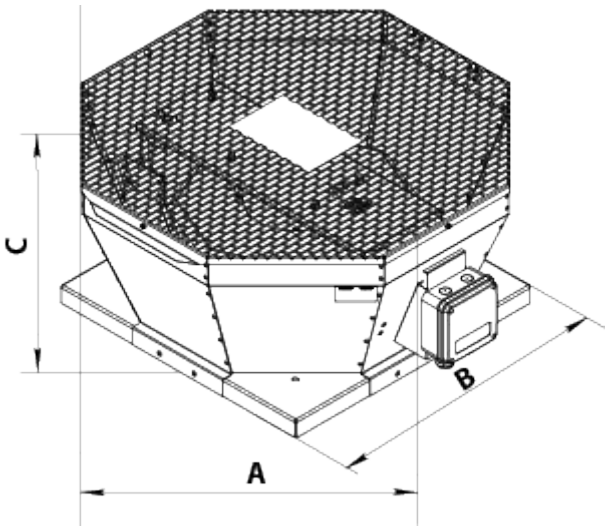

Accessories

Speed controllers

Name	Photo	Description
R-1/010		Speed controller for EC motors

Accessories for roof fans

Name	Photo	Description
RKV 220-225		Mounting frame
RKVI 220-225		Mounting frame with thermal-insulating layer
FKV 220-225		Mating flange
GKV 220-225		Flexible connector
KKV 220-225		Backdraft damper

Ecodesign

Trademark	Vents
Model	VKV 225 EC
Type of drive installed	Integrated VSD
Type of heat recovery system	None
Nominal external pressure (Pa)	186
Maximum external leakage rates (%)	2.7
Static efficiency (%)	48.3
Sound power level (dB(A))	67
Effective electric power input (kW)	0.098
Declared typology	NRVU UVU