VKS 315 U



Centrifugal inline fans in plastic casing

• Control: Built-in speed controller
• Impeller type: Centrifugal impeller with backward curved blades
• Casing material: Polypropylene
• Installation in any position
• Cable with mains plug
• Temperature sensor

	Unit of measurement	VKS 315 U	
Connected air duct size	mm	315	
Phases	-	1	
Minimum supply voltage	V	230	
Maximum supply voltage	V	230	
Power supply frequency	Hz	50	60
Rated power	W	310	
Unit current	A	1.36	
Maximum airflow	m^3/h	1700	
Rotation speed at 50hz	-	2590	
Weight	kg	4.85	
Transported air temperature (max)	°C	45	
Transported air temperature (min)	°C	-25	
Ingress protection rating	-	IPX4	
Impeller material	-	Plastic	

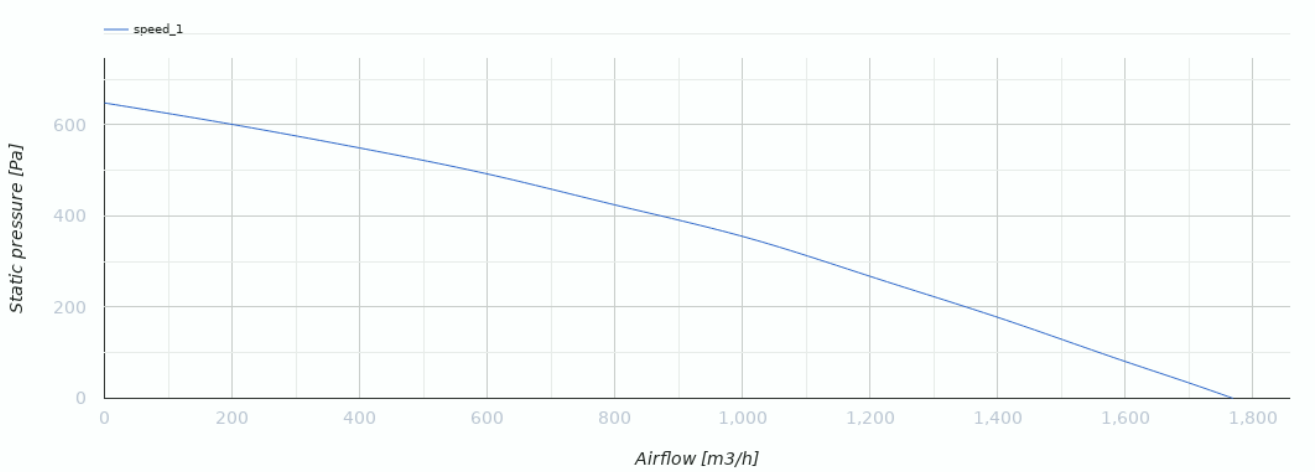

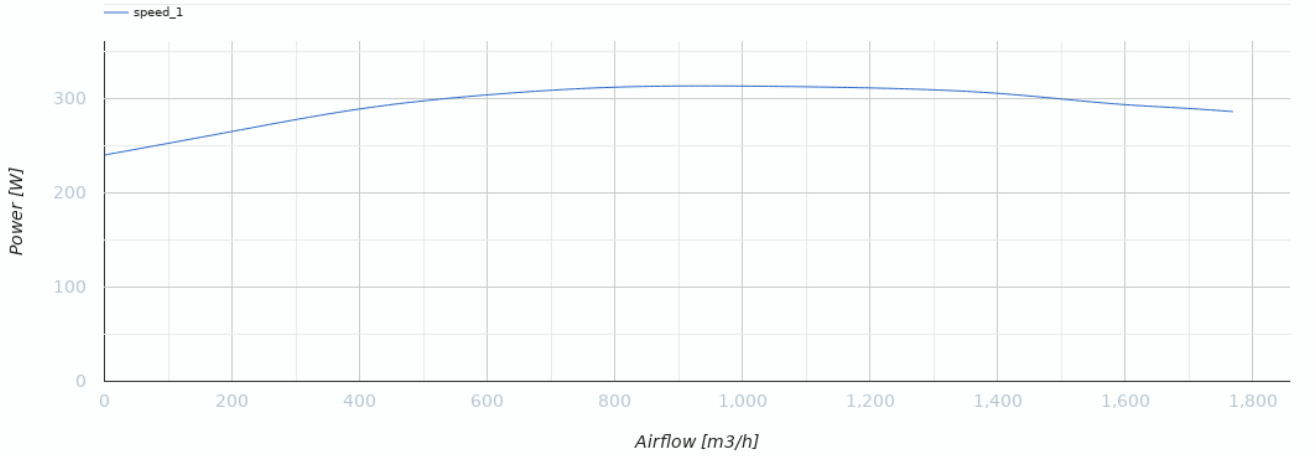

Dimensions

ØD	ØD1	B	L	L1	L2	L3
315	400	414	276	40	55	40

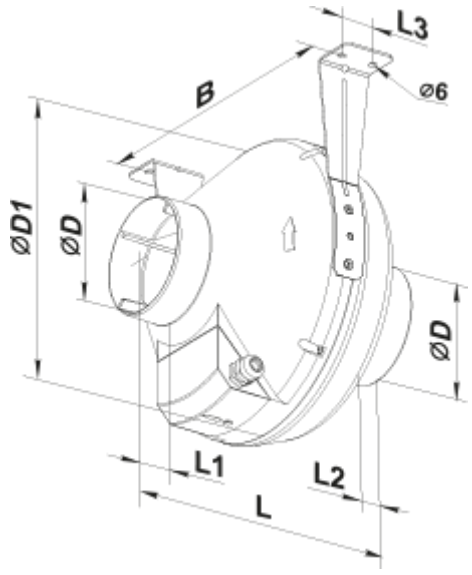

Ecodesign

Trademark	Vents
Model	VKS 315 U
Type of drive installed	External MSD or VSD
Type of heat recovery system	None
Nominal external pressure (Pa)	283
Maximum external leakage rates (%)	2.7
Static efficiency (%)	30.3
Declared typology	NRVU UVU
Effective electric power input (kW)	0.307
Sound power level (dB(A))	73