VKS 315 R1



Centrifugal inline fans in plastic casing

• Impeller type: Centrifugal impeller with backward curved blades
• Casing material: Polypropylene
• Installation in any position
• Cable with mains plug

	Unit of measurement	VKS 315 R1	
Connected air duct size	mm	315	
Phases	-	1	
Minimum supply voltage	V	230	
Maximum supply voltage	V	230	
Power supply frequency	Hz	50	60
Rated power	W	310	
Unit current	A	1.36	
Maximum airflow	m^3/h	1700	
Rotation speed at 50hz	-	2590	
Weight	kg	4.85	
Transported air temperature (max)	°C	45	
Transported air temperature (min)	°C	-25	
Ingress protection rating	-	IPX4	
Impeller material	-	Plastic	

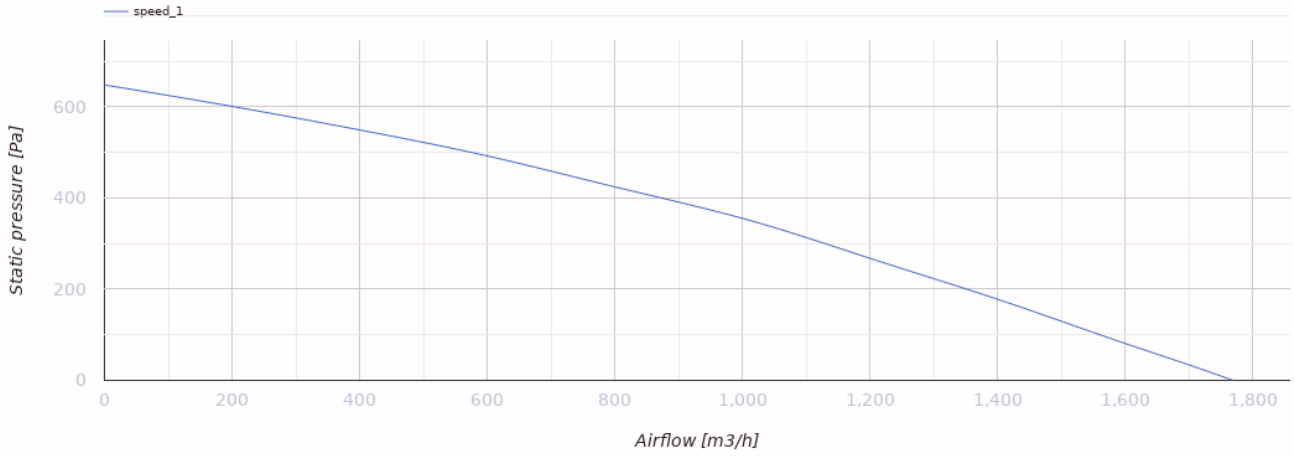

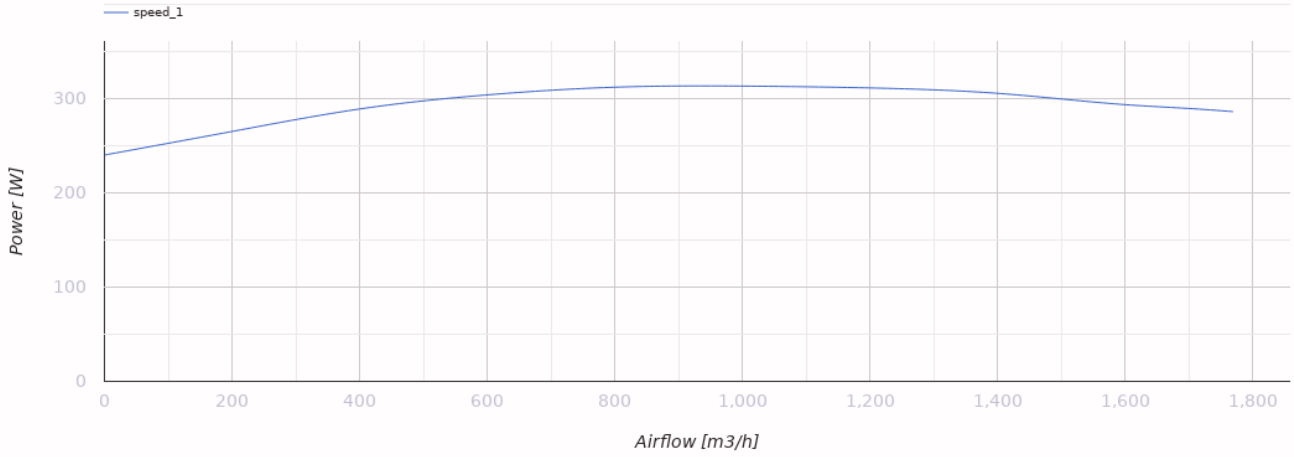

Dimensions

ØD	ØD1	B	L	L1	L2	L3
315	400	414	276	40	55	40

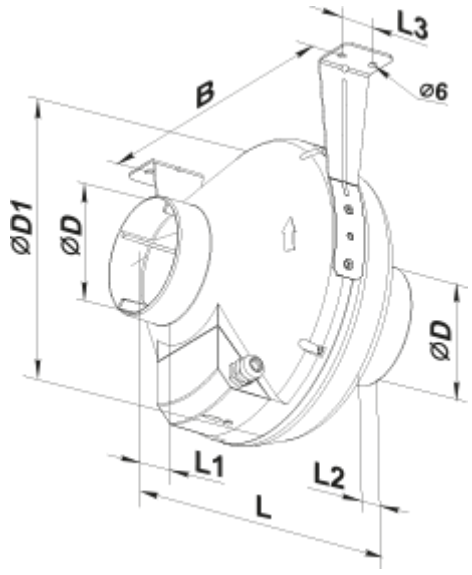

Ecodesign

Trademark	Vents
Model	VKS 315 R1
Type of drive installed	External MSD or VSD
Type of heat recovery system	None
Nominal external pressure (Pa)	283
Maximum external leakage rates (%)	2.7
Static efficiency (%)	30.3
Declared typology	NRVU UVU
Effective electric power input (kW)	0.307
Sound power level (dB(A))	73