VKPI 800x500 L3 EC



Centrifugal inline fans with backward curved blades in sound-insulated casing with EC-motors

- Sound pressure level LpA at 3 m: 42
- Sound-insulated casing
- Impeller type: Centrifugal impeller with backward curved blades
- Casing material: Galvanized steel
- Installation in any position

	Unit of measurement	VKPI 800x500 L3 EC
Connected air duct size	mm	800x500
Phases	-	3
Minimum supply voltage	V	400
Maximum supply voltage	V	400
Power supply frequency	Hz	50/60
Rated power	W	2925
Unit current	A	3.05
Maximum airflow	m³/h	8535
Rotation speed at 50hz	-	2400
Sound pressure level LpA at 3 m	dB(A)	42
Weight	kg	99.8
Transported air temperature (max)	°C	50
Transported air temperature (min)	°C	-25
Ingress protection rating	-	IPX4
Ingress protection rating of the drive	-	IP54
Impeller material	-	Aluminium

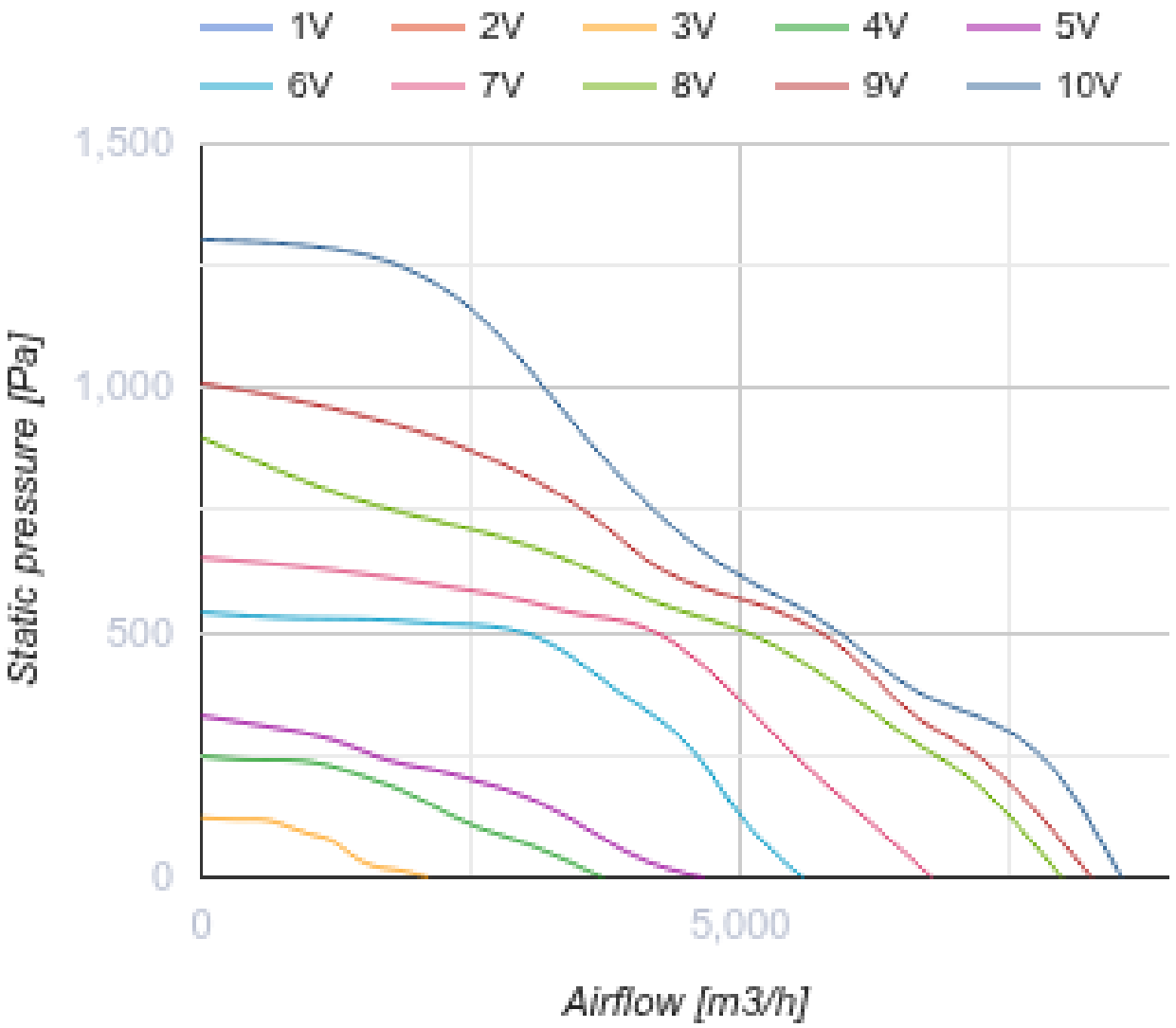
1V
2V
3V
4V
5V
6V
7V
8V
9V
10V
1,500
1,000
500
0
Static pressure [Pa]
0
5,000
Airflow [m3/h]

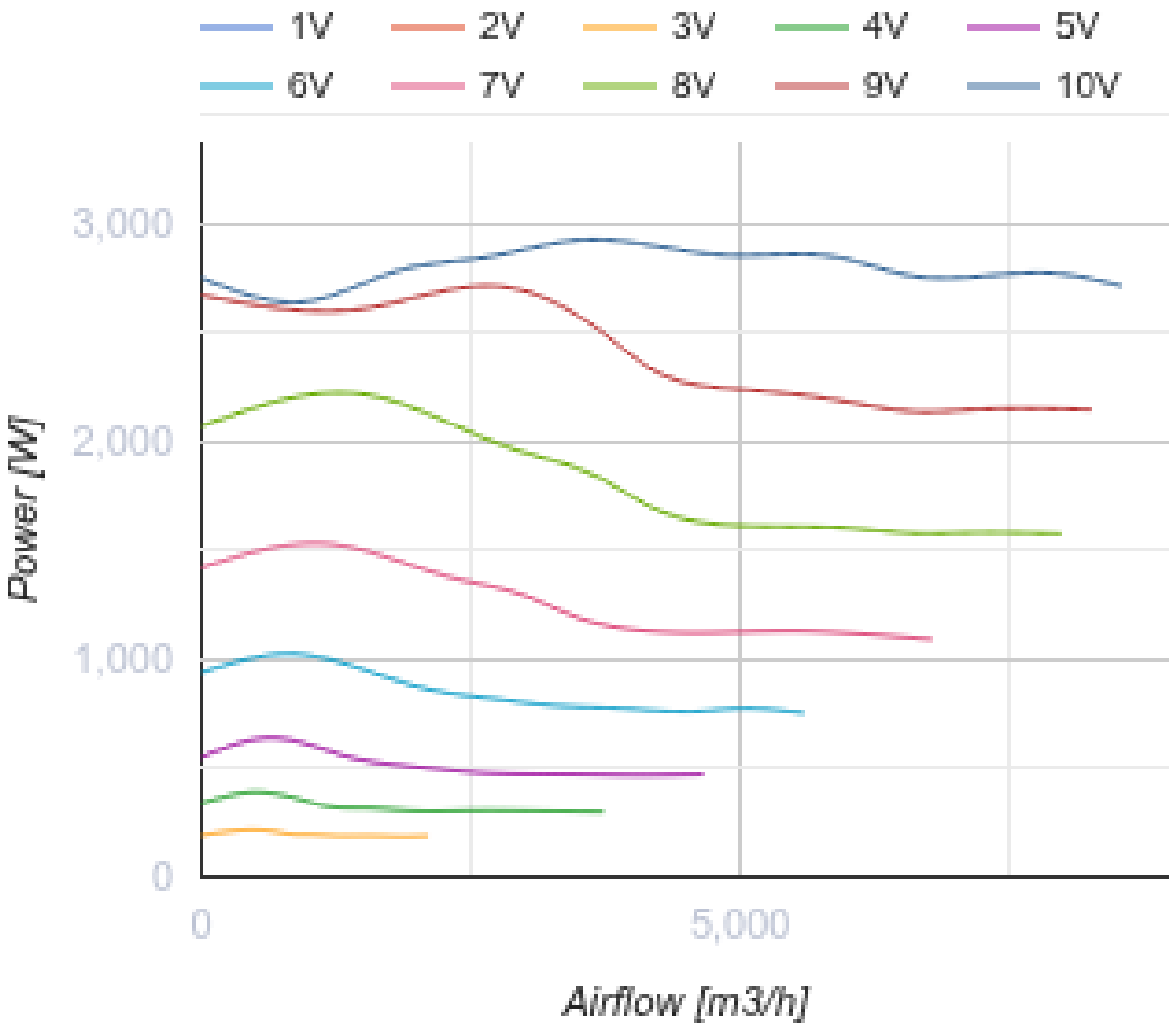

Dimensions

B	B1	B3	H	H1	H3	L	F	K
800	820	983	500	520	814	937	955	797

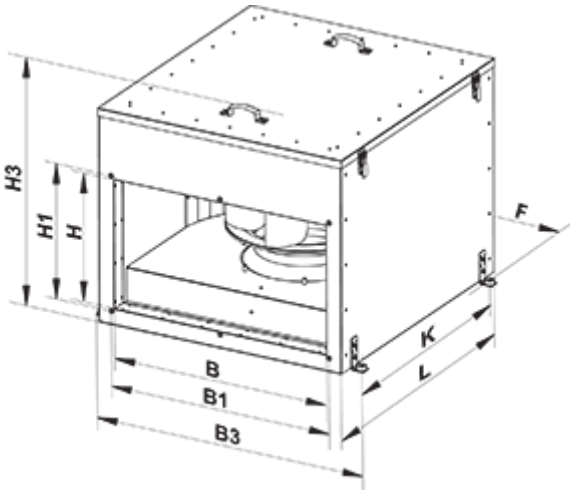

Accessories

For rectangular ducts

Name	Photo	Description
SR 800x500		Plate silencer for installation in rectangular ducts

For rectangular ducts

Name	Photo	Description
FB 800x500		Rectangular panel air filters
FBK 800x500-4		Rectangular bag air filters
FBK 800x500-5		Rectangular bag air filters
FBK 800x500-7		Rectangular bag air filters

For rectangular ducts

Name	Photo	Description
VVG 800x500		Flexible anti-vibration inserts for round air ducts

Water heaters

Name	Photo	Description

NKV 800x500-2		Inline water supply air heaters or heater for air handling units with a rectangular cross-section
NKV 800x500-3		Inline water supply air heaters or heater for air handling units with a rectangular cross-section

Electrical heaters

Name	Photo	Description
NK 800x500-27,0-3		Rectangular electric inline heaters
NK 800x500-36,0-3		Rectangular electric inline heaters
NK 800x500-54,0-3		Rectangular electric inline heaters

Airflow regulators

Name	Photo	Description
RRV 800x500		Air flow controllers

Water coolers

Name	Photo	Description
OKW 800x500-3		Rectangular inline water coolers

Freon coolers

Name	Photo	Description
OKF 800x500-3		Rectangular inline direct evaporative coolers

Ecodesign

Trademark	Vents
Model	VKPI 800x500 L3 EC
Type of drive installed	Integrated VSD
Type of heat recovery system	None
Nominal external pressure (Pa)	475
Maximum external leakage rates (%)	2.7
Static efficiency (%)	60.8
Declared typology	NRVU UVU
Effective electric power input (kW)	0.789
Sound power level (dB(A))	62