VKPI 600x300 L1 EC



Centrifugal inline fans with backward curved blades in sound-insulated casing with EC-motors

- Sound pressure level LpA at 3 m: 36
- Sound-insulated casing
- Impeller type: Centrifugal impeller with backward curved blades
- Casing material: Galvanized steel
- Installation in any position

	Unit of measurement	VKPI 600x300 L1 EC
Phases	-	1
Minimum supply voltage	V	230
Maximum supply voltage	V	230
Power supply frequency	Hz	50/60
Rated power	W	463
Unit current	A	2.03
Maximum airflow	m^3/h	3000
Rotation speed at 50hz	-	2160
Sound pressure level LpA at 3 m	dB(A)	36
Weight	kg	54.4
Transported air temperature (max)	°C	50
Transported air temperature (min)	°C	-25
Ingress protection rating	-	IPX4
Ingress protection rating of the drive	-	IP54
Impeller material	-	Aluminium

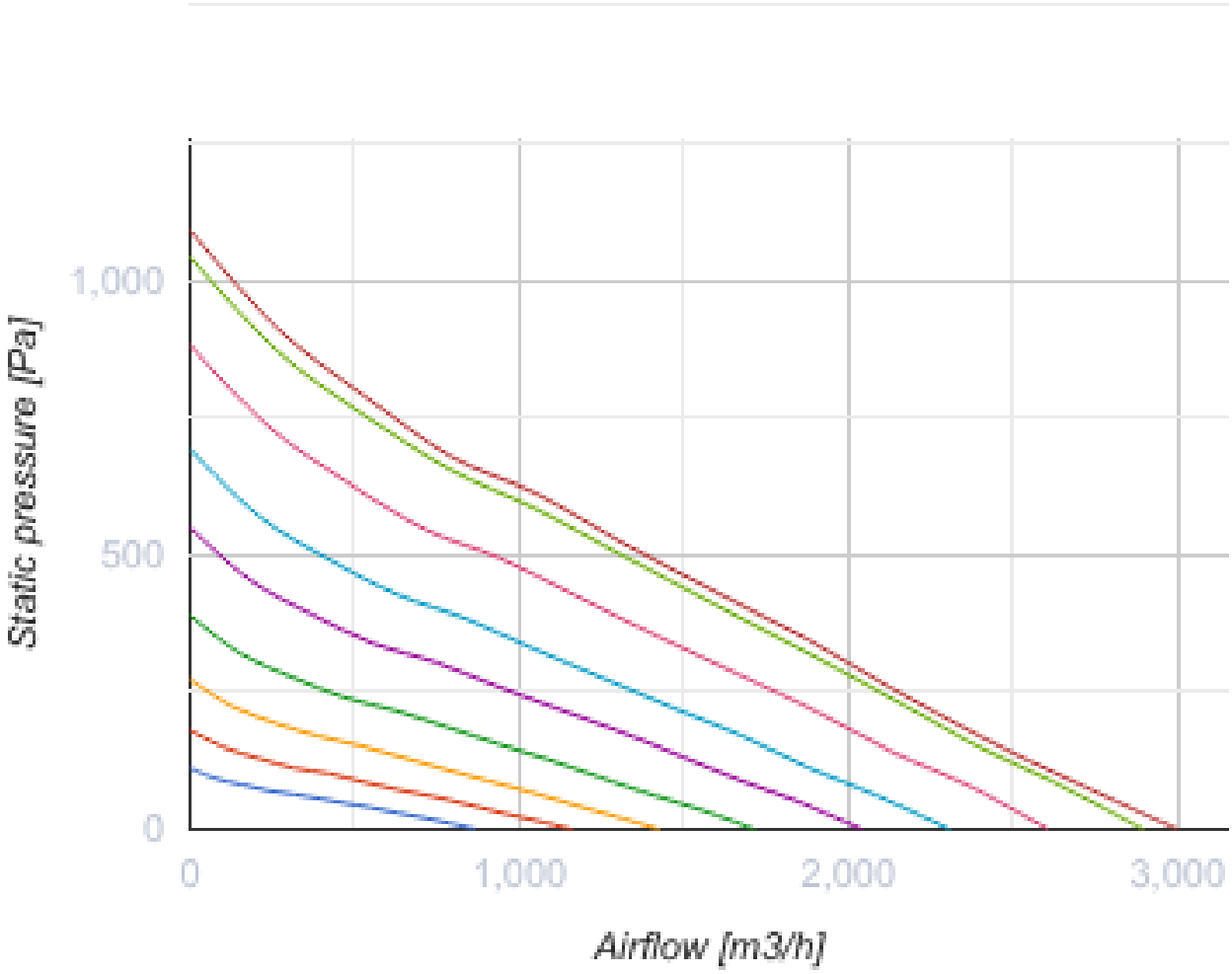
Static pressure [Pa]
1,000
500
0
0
1,000
2,000
3,000
Airflow [m3/h]

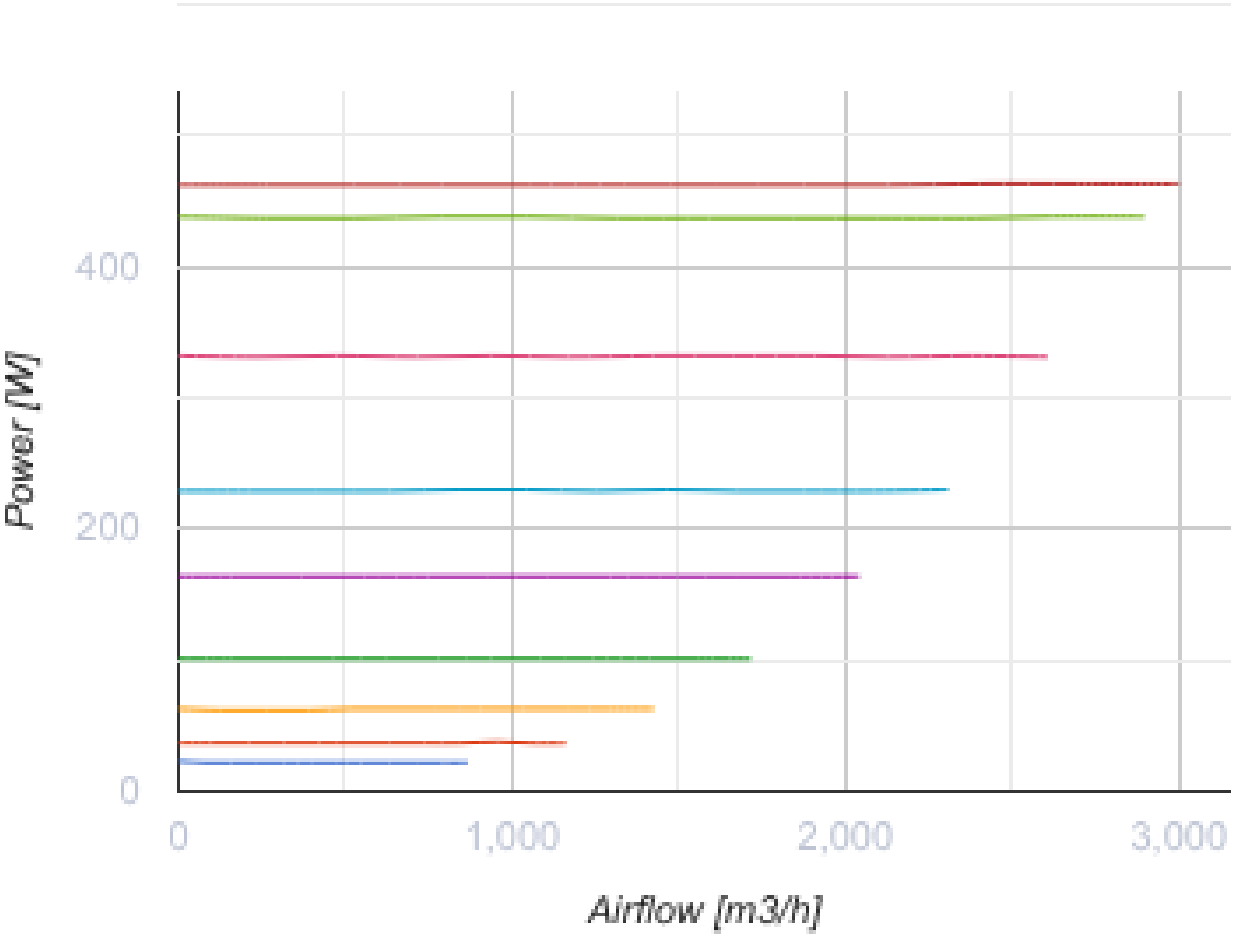

Dimensions

B	B1	B3	H	H1	H3	L	F	K
600	620	783	300	320	574	787	755	450

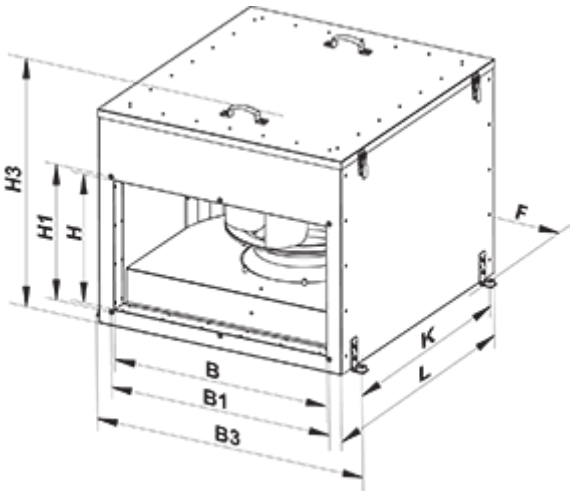

Accessories

For rectangular ducts

Name	Photo	Description
SR 600x300	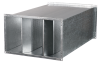	Plate silencer for installation in rectangular ducts

For rectangular ducts

Name	Photo	Description
FB 600x300		Rectangular panel air filters
FBK 600x300-4		Rectangular bag air filters
FBK 600x300-5		Rectangular bag air filters
FBK 600x300-7		Rectangular bag air filters

For rectangular ducts

Name	Photo	Description
KOM1 600x300		Backdraught gravity dampe for shutting off air flow in rectangular air ducts
KR 600x300		Air dampers for controlling air flow in rectangular air ducts

For rectangular ducts

Name	Photo	Description
VVG 600x300		Flexible anti-vibration inserts for round air ducts

Water heaters

Name	Photo	Description
NKV 600x300-2		Inline water supply air heaters or heater for air handling units with a rectangular cross-section

NKV 600x300-4		Inline water supply air heaters or heater for air handling units with a rectangular cross-section

Electrical heaters

Name	Photo	Description
NK 600x300-9,0-3		Rectangular electric inline heaters
NK 600x300-12,0-3		Rectangular electric inline heaters
NK 600x300-15,0-3		Rectangular electric inline heaters
NK 600x300-18,0-3		Rectangular electric inline heaters
NK 600x300-21,0-3		Rectangular electric inline heaters
NK 600x300-24,0-3		Rectangular electric inline heaters

Airflow regulators

Name	Photo	Description
RRV 600x300		Air flow controllers

Water coolers

Name	Photo	Description
OKW 600x300-3		Rectangular inline water coolers

Freon coolers

Name	Photo	Description
OKF 600x300-3		Rectangular inline direct evaporative coolers

Ecodesign

Trademark	Vents
Model	VKPI 600x300 L1 EC
Type of drive installed	Integrated VSD
Type of heat recovery system	None
Nominal external pressure (Pa)	429
Maximum external leakage rates (%)	2.7
Static efficiency (%)	42.3
Declared typology	NRVU UVU
Effective electric power input (kW)	0.462
Sound power level (dB(A))	63