VKPI 500x300 L1 EC



Centrifugal inline fans with backward curved blades in sound-insulated casing with EC-motors

- Sound pressure level LpA at 3 m: 43
- Sound-insulated casing
- Impeller type: Centrifugal impeller with backward curved blades
- Casing material: Galvanized steel
- Installation in any position

	Unit of measurement	VKPI 500x300 L1 EC
Connected air duct size	mm	500x300
Phases	-	1
Maximum supply voltage	V	230
Minimum supply voltage	V	230
Power supply frequency	Hz	50/60
Rated power	W	553
Unit current	A	4.2
Maximum airflow	m³/h	2700
Rotation speed at 50hz	-	3100
Sound pressure level LpA at 3 m	dB(A)	43
Weight	kg	29
Transported air temperature (max)	°C	50
Transported air temperature (min)	°C	-25
Ingress protection rating	-	IPX4
Ingress protection rating of the drive	-	IP54
Impeller material	-	Aluminium

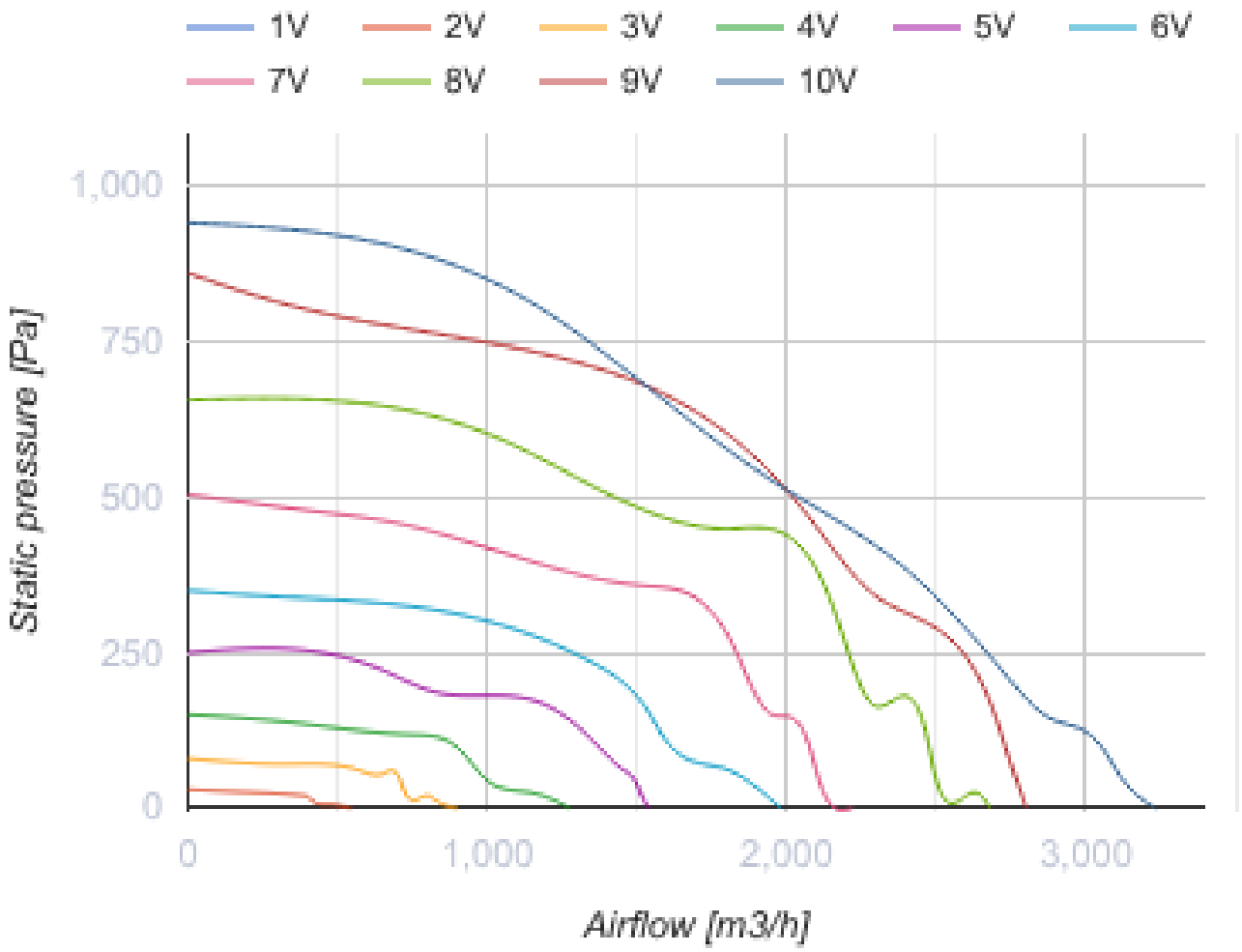
1V
2V
3V
4V
5V
6V
7V
8V
9V
10V
1,000
750
500
250
0
Static pressure [Pa]
0
1,000
2,000
3,000
Airflow [m3/h]

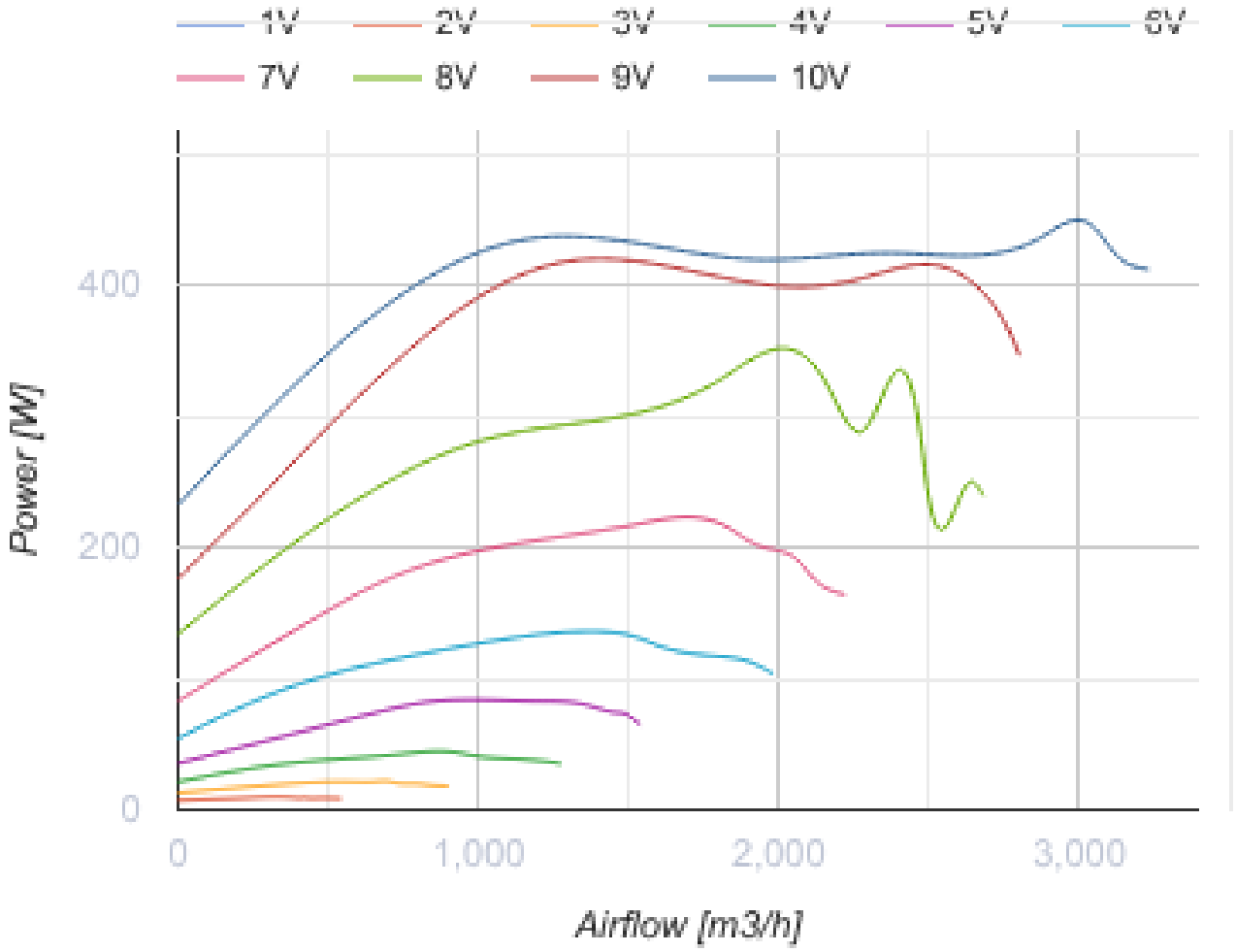

Dimensions

B	B1	B3	H	H1	H3	L
500	520	564	300	320	424	560

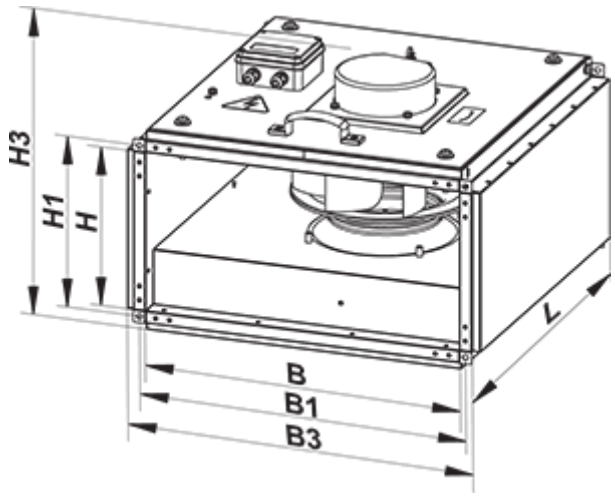

Accessories

For rectangular ducts

Name	Photo	Description
SR 500x300	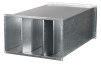	Plate silencer for installation in rectangular ducts

For rectangular ducts

Name	Photo	Description
FB 500x300		Rectangular panel air filters
FBK 500x300-4		Rectangular bag air filters
FBK 500x300-5		Rectangular bag air filters
FBK 500x300-7		Rectangular bag air filters

For rectangular ducts

Name	Photo	Description
KOM1 500x300		Backdraught gravity dampe for shutting off air flow in rectangular air ducts
KR 500x300		Air dampers for controlling air flow in rectangular air ducts

For rectangular ducts

Name	Photo	Description
VVG 500x300		Flexible anti-vibration inserts for round air ducts

Water heaters

Name	Photo	Description
NKV 500x300-2		Inline water supply air heaters or heater for air handling units with a rectangular cross-section

NKV 500x300-4		Inline water supply air heaters or heater for air handling units with a rectangular cross-section

Electrical heaters

Name	Photo	Description
NK 500x300-6,0-3		Rectangular electric inline heaters
NK 500x300-7,5-3		Rectangular electric inline heaters
NK 500x300-9,0-3		Rectangular electric inline heaters
NK 500x300-10,5-3		Rectangular electric inline heaters
NK 500x300-12,0-3		Rectangular electric inline heaters
NK 500x300-15,0-3		Rectangular electric inline heaters
NK 500x300-18,0-3		Rectangular electric inline heaters
NK 500x300-21,0-3		Rectangular electric inline heaters

Airflow regulators

Name	Photo	Description
RRV 500x300		Air flow controllers

Water coolers

Name	Photo	Description
OKW 500x300-3		Rectangular inline water coolers

Freon coolers

Name	Photo	Description

OKF 500x300-3		Rectangular inline direct evaporative coolers

Ecodesign

Trademark	Vents
Model	VKPI 500x300 L1 EC
Type of drive installed	Integrated VSD
Type of heat recovery system	None
Nominal external pressure (Pa)	533
Maximum external leakage rates (%)	2.7
Static efficiency (%)	77.3
Sound power level (dB(A))	63
Effective electric power input (kW)	0.42
Declared typology	NRVU UVU