VKPI 500x250 L1 EC



Centrifugal inline fans with backward curved blades in sound-insulated casing with EC-motors

- Sound pressure level LpA at 3 m: 41
- Sound-insulated casing
- Impeller type: Centrifugal impeller with backward curved blades
- Casing material: Galvanized steel
- Installation in any position

	Unit of measurement	VKPI 500x250 L1 EC
Connected air duct size	mm	500x250
Phases	-	1
Maximum supply voltage	V	230
Minimum supply voltage	V	230
Power supply frequency	Hz	50/60
Rated power	W	555
Unit current	A	4.1
Maximum airflow	m³/h	2480
Rotation speed at 50hz	-	3100
Sound pressure level LpA at 3 m	dB(A)	41
Weight	kg	27.7
Transported air temperature (max)	°C	50
Transported air temperature (min)	°C	-25
Ingress protection rating	-	IPX4
Ingress protection rating of the drive	-	IP54
Impeller material	-	Aluminium

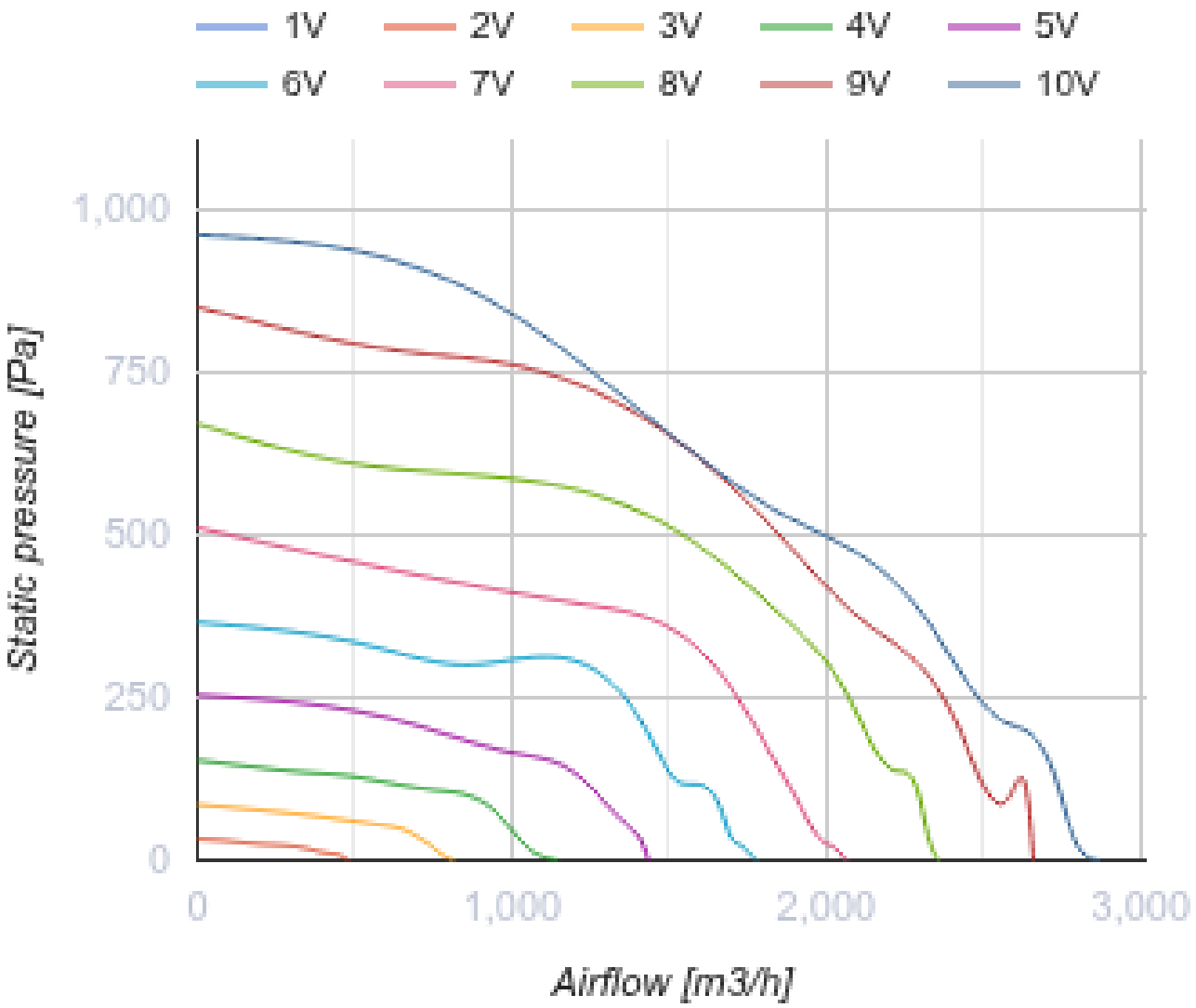
1V
2V
3V
4V
5V
6V
7V
8V
9V
10V
1,000
750
500
250
0
Static pressure [Pa]
0
1,000
2,000
3,000
Airflow [m3/h]

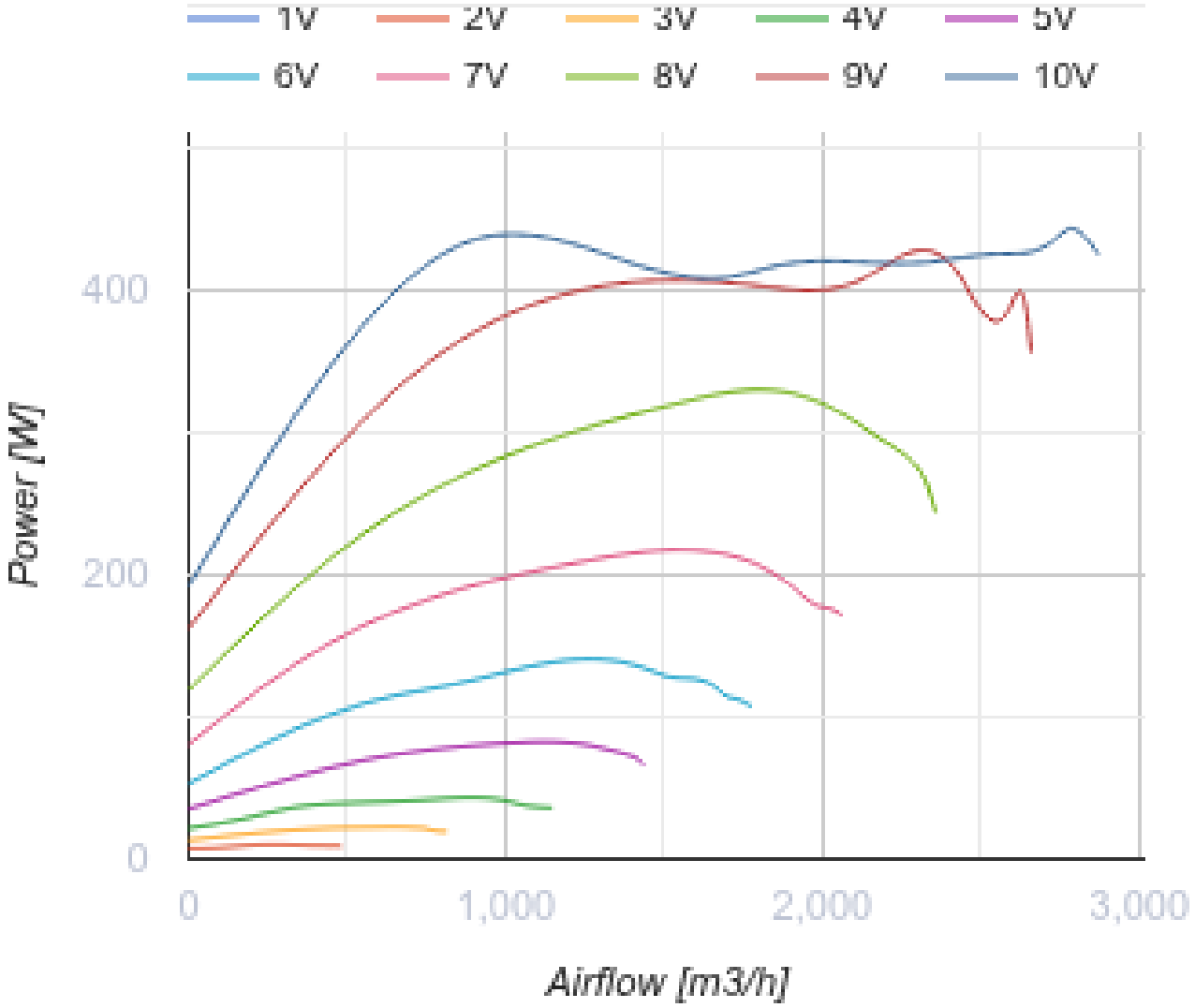

Dimensions

B	B1	B3	H	H1	H3	L
500	520	564	250	270	373	560

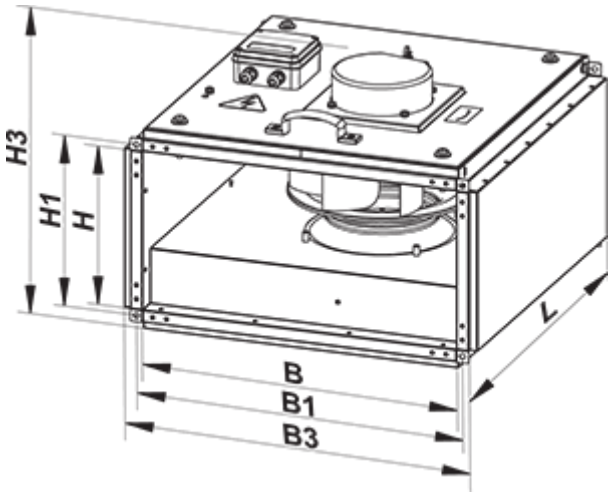

Accessories

For rectangular ducts

Name	Photo	Description
SR 500x250		Plate silencer for installation in rectangular ducts

For rectangular ducts

Name	Photo	Description
FB 500x250		Rectangular panel air filters
FBK 500x250-4		Rectangular bag air filters
FBK 500x250-5		Rectangular bag air filters
FBK 500x250-7		Rectangular bag air filters

For rectangular ducts

Name	Photo	Description
KOM1 500x250		Backdraught gravity dampe for shutting off air flow in rectangular air ducts
KR 500x250		Air dampers for controlling air flow in rectangular air ducts

For rectangular ducts

Name	Photo	Description
VVG 500x250		Flexible anti-vibration inserts for round air ducts

Water heaters

Name	Photo	Description
NKV 500x250-2		Inline water supply air heaters or heater for air handling units with a rectangular cross-section
NKV 500x250-4		Inline water supply air heaters or heater for air handling units with a rectangular cross-section

Electrical heaters

Name	Photo	Description
NK 500x250-6,0-3		Rectangular electric inline heaters
NK 500x250-7,5-3		Rectangular electric inline heaters
NK 500x250-9,0-3		Rectangular electric inline heaters
NK 500x250-10,5-3		Rectangular electric inline heaters
NK 500x250-12,0-3		Rectangular electric inline heaters
NK 500x250-15,0-3		Rectangular electric inline heaters
NK 500x250-18,0-3		Rectangular electric inline heaters
NK 500x250-21,0-3		Rectangular electric inline heaters

Airflow regulators

Name	Photo	Description

RRV 500x250		Air flow controllers

Water coolers

Name	Photo	Description
OKW 500x250-3		Rectangular inline water coolers

Freon coolers

Name	Photo	Description
OKF 500x250-3		Rectangular inline direct evaporative coolers

Ecodesign

Trademark	Vents
Model	VKPI 500x250 L1 EC
Type of drive installed	Integrated VSD
Type of heat recovery system	None
Nominal external pressure (Pa)	501
Maximum external leakage rates (%)	2.7
Static efficiency (%)	76.6
Declared typology	NRVU UVU
Effective electric power input (kW)	0.321
Sound power level (dB(A))	61